CROSS+MORSE

Power Transmission Solutions

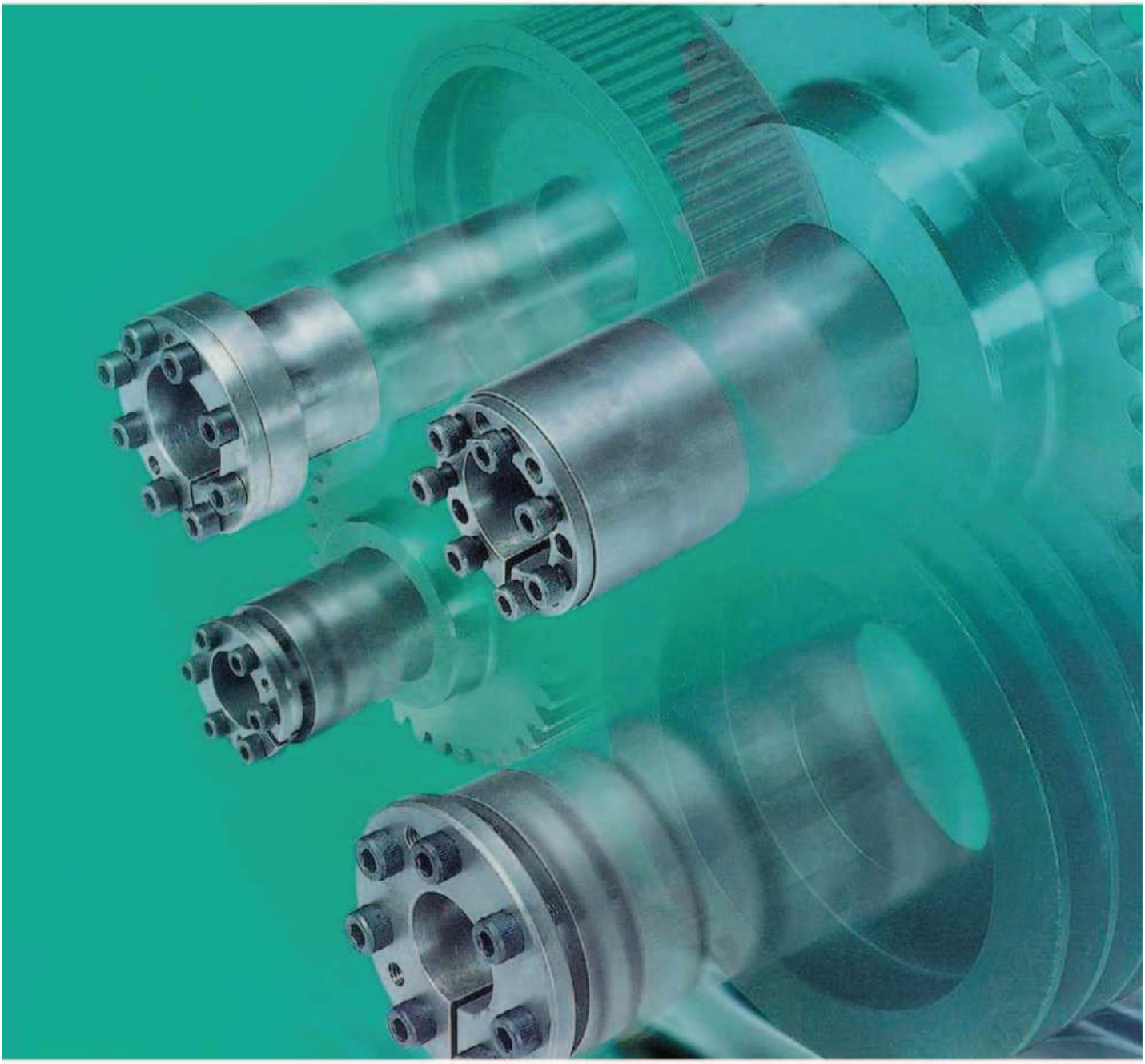

Shaft Clamping Elements

The Company

Cross & Morse was established in 1984 through the amalgamation of two long standing and well respected companies in the Power Transmission Industry, T.D. Cross and Morse Chain.

T.D. Cross & Sons was founded in 1870 in Birmingham, concentrating in the production of bicycle components under the direction of the Cross family. They moved to the current factory site in 1950 and developed into production of a popular range of roller chain sprockets and gearing. The competitive pricing and quality of product soon established the Company as a major supplier to both Agricultural and Industrial markets.

The Morse Chain Company was founded in 1894 also for the manufacture of bicycles in Pennsylvania, U.S.A. The company moved into production of inverted tooth chain drives and established a manufacturing plant in London in 1907, moving to the new Garden City of Letchworth, Herts. in 1918. The product range in the U.K. was developed to include Roller Chain and Sprockets, Couplings, Torque Limiters, Sprag Clutches and Timing Belt Drives, whilst in the U.S.A. by acquisition Morse also included the Denver Gearbox Range and the Sealmaster Bearing Products.

In 1987 Cross & Morse closed the Letchworth plant and centralised all production at the 10,000 sq. metre factory in Great Barr, Birmingham where current production of Roller Chains, Sprockets, Gears, Timing Belt Pulleys, Torque Limiters, Sprag Clutches and other specialised power transmission equipment is undertaken. In addition to manufactured products, Cross & Morse are main agents for Morse-Emerson, U.S.A.; and Stieber Formsprag, Germany; providing an extensive range of power transmission products.

The company operates a policy of continued assessment to develop and improve its products and customer service. In pursuance of these objectives Cross & Morse has been successfully assessed by Lloyds, and is registered, as an approved manufacturer of power transmission products to BS EN ISO 9001.

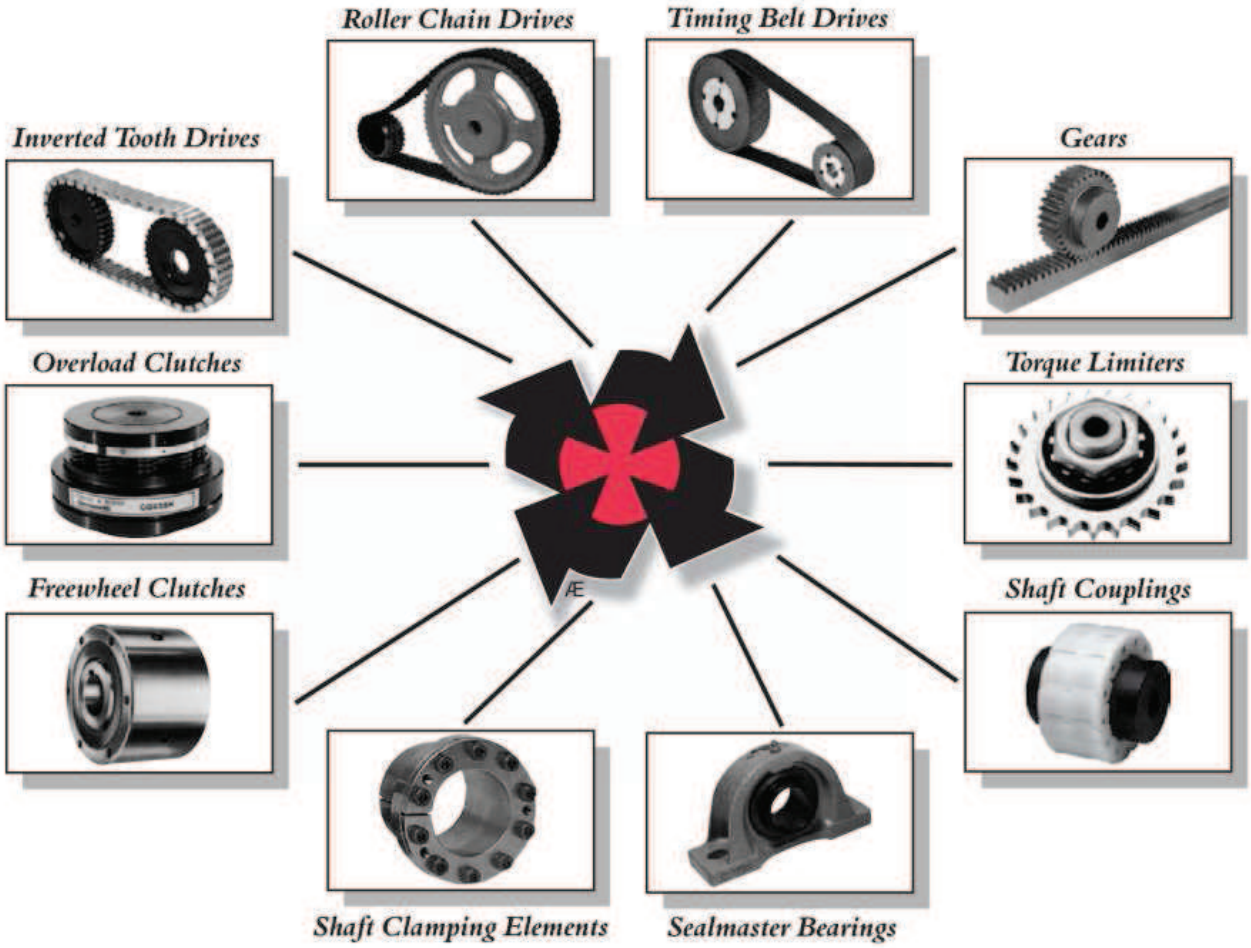

Cross Shaft Clamping Elements

Index

Contents *Page*

Tel: +44 121 360 0155 Fax: +44 121 325 1079 Email: sales@crossmorse.com

Shaft Clamping Elements

Cross Shaft Clamping Elements provide the latest technology in drive connection.

Cross Shaft Clamping Elements, by means of frictional forces, provide connection of all types of transmission equipment to their respective shafts, enabling transmission of both torque and axial thrust loads. Precision tapered thrust cones within the clamping elements create high pressure between shaft and hub to securely fasten pulleys, sprockets, gears etc. Stresses in both hub and shaft are similar to heavy press fits, however, the actual stresses are easy to calculate; and the hub can always be easily dismantled without damage to it or the shaft; only a torque wrench being required for both assembly and disassembly.
Precision transmission of torque with no backlash is obtained with shaft clamping elements, without the need of tight manufacturing tolerances of mating components. Simplified designs can enable manufacturing cost reductions, coupled with easy assembly and disassembly.

Cross Shaft Clamping Elements provide an alternative method of connecting hubs to shafts to:-

Tapered Bushes
Hydraulic Clamping Systems
Fine-bored Hubs, with Precision keyways and Locking Setscrews
Heavy Press Fits
Welded Components

Cross Shaft Clamping Elements offer many advantages:-

Easy Assembly	- Hub to shaft connection is simple, only a torque wrench being required for correct assembly.
Easy Disassembly	- Just release of locking screws is all that is required on some series, others require simple positive release by tightening screws in jacking holes.
Simplified Manufacture	- Parallel boring of hubs with H8 tolerance, or up to H11 on some sizes.
Lower Cost Assemblies	- Eliminates costly machining of splines, keyways, and setscrews.
Long Fatigue Life	- Elimination of keys prevents failure due to fretting, or notch initiated cracking under torsional loads.
No Axial Location Required	- Hubs can be positioned anywhere on shaft and locked to withstand high axial loads.
High Torque Transmission	- Most series will transmit torques equivalent to shaft capacities, and for higher torques clamping elements can be combined within one shaft/hub connection.
Small Shaft Diameters	- Elimination of keyways often enables smaller diameter shafts to be used on many applications.
Freedom from Wear	- Lack of moving parts means no wear. Shaft Clamping Elements can be tightened and released as often as required with no wear.
Less Maintenance	- Correctly assembled, Shaft Clamping Elements require no maintenance. Self locking action of most designs ensures torque transmission even if locking screws should vibrate loose during use.
True Running	- Equally distributed friction locking ensures no play and high concentricity.
Shafts Remain Unmarked	- Shaft Clamping Elements do not mark shafting ensuring ability of easy disassembly and assembly of components.
Timing of Drives	- Infinitely variable angular positioning with simple clamping and release enables simple timing of drives.
Overload Protection	- If design load is exceeded the clamping elements will slip on shaft providing protection to other machine components.
Resistance to Contamination	- When fully clamped contact surfaces are tightly pressed together preventing ingress of dirt and moisture.
Sealed Joints	- Clamping Elements Series RCK 50 can be used to provide fully Gastight Joints, to seal against passage of liquids or gases.

Tel: +44 121 360 0155 Fax: +44 121 325 1079 Email: sales@crossmorse.com

Cross Shaft Clamping Elements

In order to make the best selection of a Cross Shaft Clamping Element for your application a number of factors must be taken into consideration. These include the shaft diameter; the outside diameter of the hub of connecting component; the drive torque to be transmitted, and axial thrust loads, and tilting or bending loads, maximum shaft speeds, operating temperature, and general design parameters and space restrictions.

Shaft Diameter:-

The shaft diameter will determine the particular size of clamping element in any series, and by reference to the catalogue details the suitability of that to meet the other parameters can be checked. Also hollow shafts must be checked for any load carrying strength, see below.

Hub Outside Diameter:-

The Hub Diameter has to be sufficient to support the stresses imposed by the shaft clamping element. The catalogue gives maximum hub diameters for medium carbon steel, but for other materials and method of determining refer below. Generally if hub diameter is over 2.5 times shaft diameter all series are suitable, but for smaller ratios consider types RCK 80, ACE 81, CCE 54 and CCE 55, and for very thin walled hubs use types RCK 19, RCK 20 and RCK 25.

Determination of Minimum Hub Diameter and Max. Hollow Shaft Bore:-

The following calculations are for static conditions only, considering only stresses imposed by the clamping element. The hub diameter is controlled by the pressure applied by the outer cone of the clamping element; the shape of the hub bore and total length of hub; and yield stress for permanent elongation of 0.2%.

Minimum Hub Dia. $$Dm = D\sqrt{\frac{\sigma + PhC}{\sigma - PhC}}$$

Where
- D = Clamping element outside diameter mm
- σ = Yield strength of material N/mm²
- Ph = Surface pressure on hub N/mm²
- C = Constant for Hub shape - see drawings

The tables in the catalogue give minimum hub diameters for hubs manufactured in medium carbon steel (080M40 or C45) or other material where σ = 320 N/mm². Values for σ on other commonly used hub materials are:-

220 Grade Cast Iron	σ =	150 N/mm²
260 Grade Cast Iron	σ =	180 N/mm²
Mild Steels	σ =	220 N/mm²
070M55 (En9)	σ =	350 N/mm²
Stainless Steel	σ =	200 N/mm²
Aluminium	σ =	100 N/mm²

For hollow bored Shafting:-

Max. Bore in Shaft $$Dm = d\sqrt{\frac{\sigma - 1.6\,Ps}{\sigma}}$$

Where
- d = Clamping element bore mm
- Ps = Surface pressure on Shaft N/mm²

For solid shafting yield strength of material σ must be higher than surface pressure Ps.

Hub Assembly Type A

C=1.0

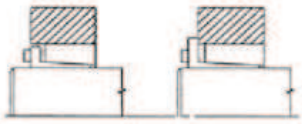

$L_1 \le Hw < 2L_1$ $L_2 \le Hw < 2L_2$

Where Hw = Hub Width

For Dimensions L_1 & L_2 ref. Product Pages

Hub Assembly Type B

C=0.8

$Hw \ge 2L_1$ $Hw \ge 2L_2$

Hub Assembly Type C

C=0.6

$Hw \ge 2L_1$ (All Types)

Maximum Shaft Speed:-

The centrifugal forces generated by high shaft speeds can reduce torque capacity and increase stress loads on hubs. Consult Cross & Morse if speed of shaft results in outer clamping diameter D running above 25M/sec.

Operating Temperature:-

Maximum temperatures should not exceed 100°C. At temperatures above 70°C the locking screws should be rechecked after 1 hour operation, whilst assembly is still warm.

Tel: +44 121 360 0155 Fax: +44 121 325 1079 Email: sales@crossmorse.com

Shaft Clamping Selection

CROSS+MORSE

Tel: +44 121 360 0155 Fax: +44 121 325 1079 Email: sales@crossmorse.com

Drive Torque to be transmitted and Axial Thrust Loads:-

The maximum effective torque Te derived from maximum Drive Torque Tm and maximum Axial Thrust Ft must always be less than the Torque Capacity M shown in tables for selected shaft clamping element.
The maximum Drive Torque Tm must take into consideration any shock loads, and also the maximum starting torque of drive. If the max. torque is not known, it can be estimated by applying the service factor from the table below to the nominal drive torque Td, which can be derived from motor power P and shaft speed N r.p.m.

Drive Torque Td $= \frac{9550\,P}{N}$ Nm Where P = Power kW, N = Shaft Speed rpm

Max. Drive Torque Tm = SF x Td Nm

Selection Factors SF

Type of Motive Power	Type of Load			
	Smooth	Light Shock	Medium Shock	Heavy Shock
a.c. Motor direct start	3	3	3	4
d.c. Motor/a.c. Motor Invertor Control or Soft Start	1.5	2	2.5	3
Hydraulic or pneumatic motors	1.2	1.5	2.5	3
Internal combustion engines	3	3.5	4	5

Axial Thrust loads on shaft clamping elements reduces torque capacity. To determine a clamping elements capability to transmit both maximum torque and axial thrust loads the effective torque must be established if any axial loading exists.

Maximum effective torque $Te = \sqrt{Tm^2 + \left(\frac{Ft.d}{2000}\right)^2}$ Nm Ft = Max. Axial Load N, d = Shaft Diameter mm

For correct selection
Torque Capacity M > Te (or Tm): and Axial Force Capacity F > Ft

Tilting or Bending Loads:-

Always endeavour to design location of shaft clamping element directly beneath line of driving force on hub, ie chain, vee belt etc. If overhang of load or force occurs the torque capacity of the clamping element can be reduced. Under no circumstances should the resultant couple force on the clamping element exceed 0.25M

General Design Factors:-

Never place a shaft clamping element radically inline with a bearing, as expansion due to clamping could cause bearing seizure. To help final selection refer to table below for series selection.

General Features of Cross Shaft Clamping Elements

FEATURE / SERIES	RCK 10 to12	RCK 13	RCK 15	RCK 16	RCK 19/20	RCK 25	RCK 40	RCK 45	RCK 50	CCE 54	CCE 55	RCK 61	RCK 70	RCK 71	RCK 80	RCK 81	RCK 95
Torque Capacity	HIGH	MED	MED	MED	HIGH	HIGH	MED	MED	LOW	LOW	MED	LOW	MED	MED	MED	MED	LOW
Self Centring	YES	YES	YES	YES	YES	YES	NO	YES	YES	YES	YES	YES	YES	YES	YES	YES	N/A
Concentricity Accuracy	GOOD	GOOD	GOOD	GOOD	HIGH	HIGH	LOW	GOOD	LOW	MED	MED	GOOD	HIGH	GOOD	GOOD	GOOD	MED
Axial Movement in Clamping	NO	YES	NO	NO	NO	NO	NO	YES	NO[1]	NO[1]	NO[1]	YES	YES	NO	NO	NO	NO
Hub Surface Pressures	MED	HIGH	MED	MED	N/A	N/A	MED	MED	LOW	LOW	LOW	LOW	HIGH	MED	LOW	LOW	N/A
Self Locking When Clamped	YES	YES	YES	YES	NO	YES	NO	NO	NO	YES	YES	YES	YES	YES	YES	YES	NO
Suitable for Thin Walled Hub	NO	NO	NO	NO	YES	YES	NO	NO	YES	YES	YES	NO	NO	NO	YES	YES	N/A
Short Overall Length	NO	YES	YES	YES	YES	YES	YES	YES	YES	YES	YES	YES	NO	NO	NO	NO	NO
Clamps Outside Hub Dia.	NO	NO	NO	NO	YES	YES	NO	NO	NO	NO	NO	NO	NO	NO	NO	NO	YES
Cost of Assembly	HIGH	MED	LOW	MED	HIGH	HIGH	LOW	LOW	LOW	LOW	LOW	LOW	MED	MED	MED	MED	HIGH
Catalogue Page	14/15	6	5	7	20/21	22	12/13	16	18	19	19	17	8	9	10	11	23

[1] Depends on design.

Clamping Elements Type RCK 15

Designed for use with standardised ranges of pulleys, sprockets, and gears, the shaft clamping elements can accommodate a large range of shaft diameters with a hub of constant bore diameter. On clamping precise axial and radial positioning is provided, combined with medium torque transmission capability.

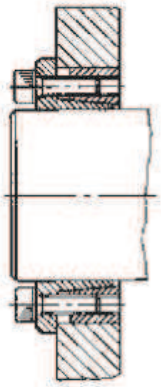

Recommended tolerances for full torque transmission are:-

Shaft h8
Hub H8

Clamping surfaces to be finished to Rz ≤ 15 μm.

Cross & Morse can provide standard Roller Chain Sprockets finish bored to accommodate RCK 15 shaft clamping elements, with ability to fit to either hub or sprocket end.

X = Distance required to remove screws, additional clearance for alan key may be required.

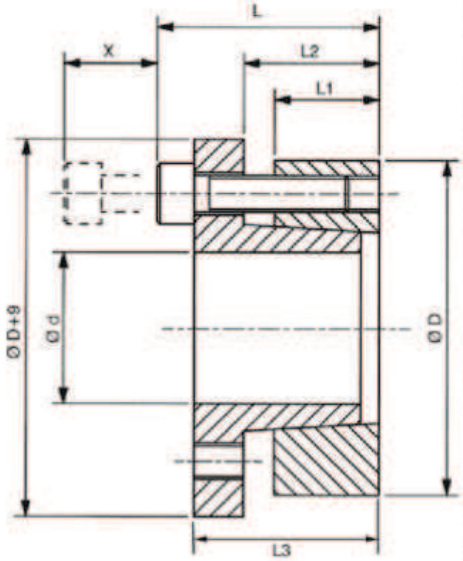

Dimensions

Part No.	Dimensions mm							Torque Cap. M Nm	Axial Force F kN	Surface Pressure		Clamping Screws		Approx. Weight	Min. Hub Dia* mm		
	d	D	L	L_1	L_2	L_3	X			Shaft Ps N/mm²	Hub Ph N/mm²	Size	Torque Nm	kg	Assy Type A	Assy Type B	Assy Type C
RCK15-14x55	14	55	39	17	22	31	25	282	39	458	118	M8	41	0.51	81	75	69
RCK15-16x55	16	55	39	17	22	31	25	313	39	400	118	M8	41	0.49	81	75	69
RCK15-18x55	18	55	39	17	22	31	25	353	39	356	118	M8	41	0.48	81	75	69
RCK15-19x55	19	55	39	17	22	31	25	372	39	337	118	M8	41	0.47	81	75	69
RCK15-20x55	20	55	39	17	22	31	25	392	39	320	118	M8	41	0.47	81	75	69
RCK15-22x55	22	55	39	17	22	31	25	431	39	290	118	M8	41	0.45	81	75	69
RCK15-24x55	24	55	39	17	22	31	25	470	39	265	118	M8	41	0.44	81	75	69
RCK15-25x55	25	55	39	17	22	31	25	490	39	255	118	M8	41	0.43	81	75	69
RCK15-28x55	28	55	39	17	22	31	25	549	39	228	118	M8	41	0.41	81	75	69
RCK15-30x55	30	55	39	17	22	31	25	588	39	213	118	M8	41	0.40	81	75	69
RCK15-24x65	24	65	39	17	22	31	25	617	51	332	122	M8	41	0.68	97	89	82
RCK15-25x65	25	65	39	17	22	31	25	637	51	320	122	M8	41	0.63	97	89	82
RCK15-28x65	28	65	39	17	22	31	25	725	51	285	122	M8	41	0.61	97	89	82
RCK15-30x65	30	65	39	17	22	31	25	764	51	267	122	M8	41	0.58	97	89	82
RCK15-32x65	32	65	39	17	22	31	25	823	51	250	122	M8	41	0.56	97	89	82
RCK15-35x65	35	65	39	17	22	31	25	902	51	228	122	M8	41	0.53	97	89	82
RCK15-38x65	38	65	39	17	22	31	25	970	51	210	122	M8	41	0.50	97	89	82
RCK15-40x65	40	65	39	17	22	31	25	1029	51	200	122	M8	41	0.47	97	89	82
RCK15-30x80	30	80	41	20	25	33	25	1082	72	315	120	M8	41	1.04	119	109	101
RCK15-32x80	32	80	41	20	25	33	25	1155	72	298	120	M8	41	1.03	119	109	101
RCK15-35x80	35	80	41	20	25	33	25	1260	72	272	120	M8	41	0.98	119	109	101
RCK15-38x80	38	80	41	20	25	33	25	1370	72	250	120	M8	41	0.94	119	109	101
RCK15-40x80	40	80	41	20	25	33	25	1440	72	238	120	M8	41	0.91	119	109	101
RCK15-42x80	42	80	41	20	25	33	25	1510	72	226	120	M8	41	0.89	119	109	101
RCK15-45x80	45	80	41	20	25	33	25	1620	72	212	120	M8	41	0.83	119	109	101
RCK15-48x80	48	80	41	20	25	33	25	1735	72	198	120	M8	41	0.79	119	109	101
RCK15-50x80	50	80	41	20	25	33	25	1806	72	190	120	M8	41	0.74	119	109	101
RCK15-40x80H	40	80	41	20	25	33	25	2157	108	340	169	M8	41	0.89	144	126	111
RCK15-45x80H	45	80	41	20	25	33	25	2422	108	302	169	M8	41	0.85	144	126	111
RCK15-50x80H	50	80	41	20	25	33	25	2700	108	272	169	M8	41	0.78	144	126	111

*Minimum outside diameter of hubs manufactured in medium carbon steels with yield strength ≥ 320 N/mm².
For hub types, and other materials, refer to page 3.
For assembly and disassembly instructions refer to page 24.

Tel: +44 121 360 0155 Fax: +44 121 325 1079 Email: sales@crossmorse.com

Clamping Elements Type RCK 13

These shaft clamping elements are very compact units capable of transmitting medium torques. Their design ensures good concentricity between hubs and shafts, without any other means of location. A slight axial movement between hub and shaft occurs during clamping. These units can be installed totally within the hub providing optimum safety, and minimal axial length.

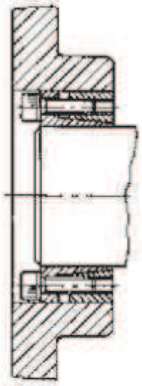

Recommended tolerances for full torque transmission are:-

Shaft	h8
Hub	H8

Clamping surfaces to be finished to Rz ≤ 15 μm.

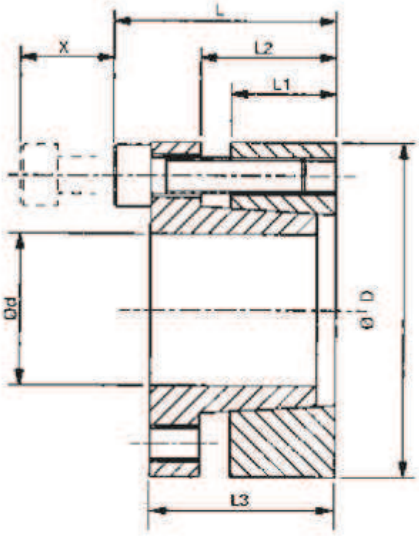

X = Distance required to remove screws, additional clearance for alan key may be required.

Dimensions

Part No.	Dimensions mm							Torque Cap. M Nm	Axial Force F kN	Surface Pressure		Clamping Screws		Approx. Weight	Min. Hub Dia* mm		
	d	D	L	L_1	L_2	L_3	X			Shaft Ps N/mm²	Hub Ph N/mm²	Size	Torque Nm	kg	Assy Type A	Assy Type B	Assy Type C
RCK13-18x47	18	47	34	17	22	28	20	350	39	280	120	M6	14	0.27	70	64	59
RCK13-19x47	19	47	34	17	22	28	20	355	37	280	120	M6	14	0.27	70	64	59
RCK13-20x47	20	47	34	17	22	28	20	360	36	280	120	M6	14	0.26	70	64	59
RCK13-22x47	22	47	34	17	22	28	20	400	36	268	123	M6	14	0.25	70	65	59
RCK13-24x50	24	50	34	17	22	28	20	440	37	243	120	M6	14	0.28	74	68	63
RCK13-25x50	25	50	34	17	22	28	20	560	45	280	138	M6	14	0.27	79	72	65
RCK13-28x55	28	55	34	17	22	28	20	625	45	250	128	M6	14	0.32	84	77	70
RCK13-30x55	30	55	34	17	22	28	20	650	43	235	128	M6	14	0.30	84	77	70
RCK13-32x60	32	60	34	17	22	28	20	950	59	290	150	M6	14	0.37	100	89	80
RCK13-35x60	35	60	34	17	22	28	20	1050	60	268	150	M6	14	0.34	100	89	80
RCK13-38x65	38	65	34	17	22	28	20	1140	60	252	146	M6	14	0.41	106	95	86
RCK13-40x65	40	65	34	17	22	28	20	1200	60	232	146	M6	14	0.38	106	95	86
RCK13-45x75	45	75	41	20	25	33	25	2180	97	285	168	M8	35	0.63	134	117	104
RCK13-50x80	50	80	41	20	25	33	25	2430	97	258	158	M8	35	0.68	137	121	109
RCK13-55x85	55	85	41	20	25	33	25	3050	111	268	173	M8	35	0.73	156	135	119
RCK13-60x90	60	90	41	20	25	33	25	3350	112	243	163	M8	35	0.78	158	139	123
RCK13-65x95	65	95	41	20	25	33	25	4080	126	253	173	M8	35	0.83	174	151	133
RCK13-70x110	70	110	50	24	30	40	30	6280	179	278	178	M10	70	1.33	206	177	156
RCK13-75x115	75	115	50	24	30	40	30	6680	178	258	168	M10	70	1.39	206	180	159
RCK13-80x120	80	120	50	24	30	40	30	7130	178	248	168	M10	70	1.48	215	188	166
RCK13-85x125	85	125	50	24	30	40	30	8450	199	258	178	M10	70	1.55	234	202	177
RCK13-90x130	90	130	50	24	30	40	30	9080	202	248	168	M10	70	1.63	233	203	180
RCK13-95x135	95	135	50	24	30	40	30	10580	223	258	178	M10	70	1.70	253	218	191
RCK13-100x145	100	145	56	26	32	44	35	13380	268	268	188	M12	125	2.60	284	241	210
RCK13-110x155	110	155	56	26	32	44	35	14580	265	238	178	M12	125	2.80	290	250	219
RCK13-120x165	120	165	56	26	32	44	35	17880	298	248	178	M12	125	3.00	309	266	233
RCK13-130x180	130	180	64	34	40	52	35	25950	399	238	168	M12	125	4.60	323	282	249
RCK13-140x190	140	190	68	34	40	54	40	26950	385	208	148	M14	190	4.90	313	280	253
RCK13-150x200	150	200	68	34	40	54	40	32950	439	228	168	M14	190	5.20	358	313	277
RCK13-160x210	160	210	68	34	40	54	40	38800	485	213	170	M14	190	5.50	380	331	292
RCK13-170x225	170	225	78	44	49	64	50	41300	486	188	130	M14	190	7.70	346	315	289
RCK13-180x235	180	235	78	44	49	64	50	43700	486	178	125	M14	190	8.10	355	325	298
RCK13-190x250	190	250	78	44	49	64	50	57700	607	173	145	M14	190	8.60	408	365	330
RCK13-200x260	200	260	78	44	49	64	50	60700	607	165	140	M14	190	9.00	416	375	340
RCK13-220x285	220	285	88	51	57	72	55	78100	710	180	132	M16	290	12.00	442	402	367
RCK13-240x305	240	305	88	51	57	72	55	106500	848	182	154	M16	290	13.00	515	458	411
RCK13-260x325	260	325	88	51	57	72	55	138500	1017	198	174	M16	290	13.90	598	518	456
RCK13-280x355	280	355	102	60	66	84	65	160300	1094	169	143	M18	400	20.40	574	516	467
RCK13-300x375	300	375	102	60	66	84	65	193200	1230	174	152	M18	400	21.60	629	559	503

*Minimum outside diameter of hubs manufactured in medium carbon steels with yield strength ≥ 320 N/mm².
For hub types, and other materials, refer to page 3.
For assembly and disassembly instructions refer to page 24.

Tel: +44 121 360 0155 Fax: +44 121 325 1079 Email: sales@crossmorse.com

Clamping Elements Type RCK 16

These clamping elements are basically to same design as RCK 13, but with increased diameter flange to locate hub and prevent axial movements, so combining good concentricity with positive axial location. The increase in friction between the cones due to axial restriction results in torque reduction of approx 20%, but this also means reduced surface pressures to both hub and shaft.

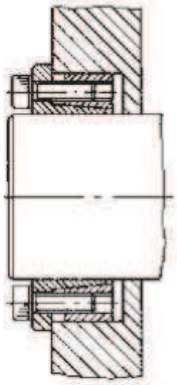

Recommended tolerances for full torque transmission are:-

Shaft h8
Hub H8

Clamping surfaces to be finished to Rz ≤ 15 μm.

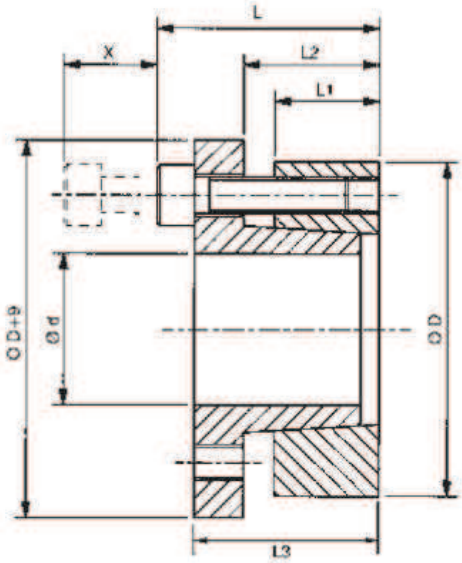

X = Distance required to remove screws, additional clearance for alan key may be required.

Dimensions

Part No.	Dimensions mm							Torque Cap. M Nm	Axial Force F kN	Surface Pressure		Clamping Screws		Approx. Weight	Min. Hub Dia* mm		
	d	D	L	L_1	L_2	L_3	X			Shaft Ps N/mm²	Hub Ph N/mm²	Size	Torque Nm	kg	Assy Type A	Assy Type B	Assy Type C
RCK16-18x47	18	47	34	17	22	28	20	264	29	215	93	M6	17	0.28	63	60	56
RCK16-19x47	19	47	34	17	22	28	20	274	29	215	93	M6	17	0.27	63	60	56
RCK16-20x47	20	47	34	17	22	28	20	284	28	215	93	M6	17	0.26	63	60	56
RCK16-22x47	22	47	34	17	22	28	20	314	29	196	93	M6	17	0.25	63	60	56
RCK16-24x50	24	50	34	17	22	28	20	401	33	215	107	M6	17	0.28	71	66	61
RCK16-25x50	25	50	34	17	22	28	20	441	35	210	107	M6	17	0.27	71	66	61
RCK16-28x55	28	55	34	17	22	28	20	490	35	196	98	M6	17	0.35	75	71	66
RCK16-30x55	30	55	34	17	22	28	20	529	35	186	98	M6	17	0.32	75	71	66
RCK16-32x60	32	60	34	17	22	28	20	755	47	210	112	M6	17	0.38	86	80	74
RCK16-35x60	35	60	34	17	22	28	20	824	47	186	107	M6	17	0.35	85	79	74
RCK16-38x65	38	65	34	17	22	28	20	892	47	191	112	M6	17	0.41	94	87	80
RCK16-40x65	40	65	34	17	22	28	20	941	47	186	102	M6	17	0.39	90	84	79
RCK16-45x75	45	75	41	20	25	33	25	1716	76	225	132	M8	41	0.65	116	106	97
RCK16-50x80	50	80	41	20	25	33	25	1893	76	205	127	M8	41	0.69	122	111	102
RCK16-55x85	55	85	41	20	25	33	25	2403	87	210	132	M8	41	0.75	132	120	109
RCK16-60x90	60	90	41	20	25	33	25	2648	88	186	122	M8	41	0.80	134	123	114
RCK16-65x95	65	95	41	20	25	33	25	3188	98	196	132	M8	41	0.85	147	134	122
RCK16-70x110	70	110	50	24	30	40	30	4905	140	215	137	M10	83	1.35	174	157	143
RCK16-75x115	75	115	50	24	30	40	30	5150	137	195	127	M10	83	1.42	175	160	147
RCK16-80x120	80	120	50	24	30	40	30	5490	137	185	122	M10	83	1.51	179	164	151
RCK16-85x125	85	125	50	24	30	40	30	6620	156	195	132	M10	83	1.58	194	176	161
RCK16-90x130	90	130	50	24	30	40	30	6960	155	185	127	M10	83	1.66	198	181	166
RCK16-95x135	95	135	50	24	30	40	30	8190	172	195	137	M10	83	1.73	213	193	176
RCK16-100x145	100	145	56	26	32	44	35	10100	202	205	145	M12	145	2.64	236	212	192
RCK16-110x155	110	155	56	26	32	44	35	11030	201	190	135	M12	145	2.84	243	220	201
RCK16-120x165	120	165	56	26	32	44	35	13600	227	205	142	M12	145	3.05	266	239	217
RCK16-130x180	130	180	64	34	40	52	35	19000	292	186	137	M12	145	4.70	284	257	234
RCK16-140x190	140	190	68	34	40	54	40	21800	311	177	127	M14	230	4.95	289	264	242
RCK16-150x200	150	200	68	34	40	54	40	25600	341	185	130	M14	230	5.30	308	280	256
RCK16-160x210	160	210	68	34	40	54	40	31300	391	174	150	M14	230	5.60	349	311	280
RCK16-170x225	170	225	78	44	49	64	50	33200	391	147	110	M14	230	7.90	322	298	277
RCK16-180x235	180	235	78	44	49	64	50	35000	389	139	100	M14	230	8.30	325	303	284
RCK16-190x250	190	250	78	44	49	64	50	46500	489	132	120	M14	230	8.80	371	341	314
RCK16-200x260	200	260	78	44	49	64	50	49000	500	125	110	M14	230	9.20	372	345	321
RCK16-220x285	220	285	88	51	57	72	55	57100	519	132	97	M16	360	12.30	390	365	343
RCK16-240x305	240	305	88	51	57	72	55	77800	649	134	113	M16	360	13.30	441	408	378
RCK16-260x325	260	325	88	51	57	72	55	101200	778	145	127	M16	360	14.30	495	452	414
RCK16-280x355	280	355	102	60	66	84	65	113300	808	120	101	M18	480	21.00	492	460	430
RCK16-300x375	300	375	102	60	66	84	65	136500	910	123	107	M18	480	22.20	531	493	460

*Minimum outside diameter of hubs manufactured in medium carbon steels with yield strength ≥ 320 N/mm².
For hub types, and other materials, refer to page 3.
For assembly and disassembly instructions refer to page 24.

Tel: +44 121 360 0155 Fax: +44 121 325 1079 Email: sales@crossmorse.com

Clamping Elements Type RCK 70

These shaft clamping elements are designed to give optimum concentricity, both radically and axially. Similar in design to the RCK 13, but with increased length to provide improved support, and reduced pressures on both shaft and hub. These units must always be installed inside the hub to ensure optimum concentricity. Axial movement of hub will occur during clamping operation.

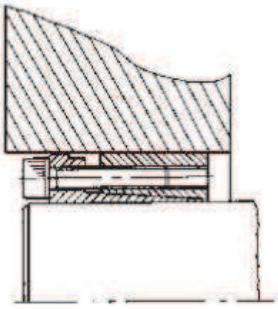

Recommended tolerances for full torque transmission are:-

Shaft	h8
Hub	H8

Clamping surfaces to be finished to Rz ≤ 15 μm.

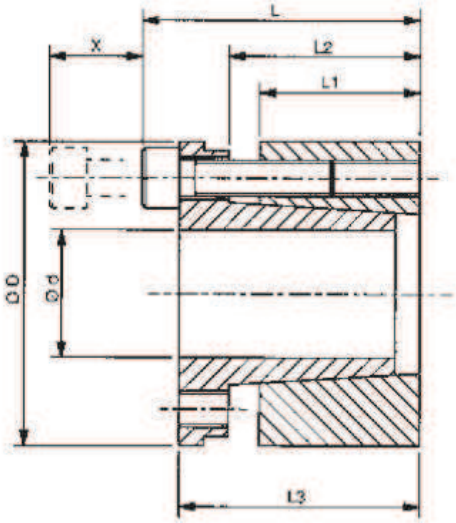

X = Distance required to remove screws, additional clearance for alan key may be required.

Dimensions

Part No.	Dimensions mm							Torque Cap. M Nm	Axial Force F kN	Surface Pressure		Clamping Screws		Approx. Weight	Min. Hub Dia* mm		
	d	D	L	L_1	L_2	L_3	X			Shaft Ps N/mm²	Hub Ph N/mm²	Size	Torque Nm	kg	Assy Type A	Assy Type B	Assy Type C
RCK70-19x47	19	47	45	26	31	39	25	403	42	228	98	M6	17	0.38	64	60	57
RCK70-20x47	20	47	45	26	31	39	25	443	44	226	98	M6	17	0.37	64	60	57
RCK70-22x47	22	47	45	26	31	39	25	510	46	215	93	M6	17	0.36	63	60	56
RCK70-24x50	24	50	45	26	31	39	25	607	51	215	102	M6	17	0.39	70	65	61
RCK70-25x50	25	50	45	26	31	39	25	689	55	225	102	M6	17	0.38	70	65	61
RCK70-28x55	28	55	45	26	31	39	25	826	59	215	107	M6	17	0.45	78	72	67
RCK70-30x55	30	55	45	26	31	39	25	865	58	196	117	M6	17	0.42	81	74	69
RCK70-32x60	32	60	45	26	31	39	25	1129	71	225	111	M6	17	0.52	86	80	74
RCK70-35x60	35	60	45	26	31	39	25	1177	67	196	116	M6	17	0.48	88	81	75
RCK70-38x65	38	65	45	26	31	39	25	1451	76	205	121	M6	17	0.57	97	89	82
RCK70-40x65	40	65	45	26	31	39	25	1537	77	196	122	M6	17	0.54	97	89	82
RCK70-42x75	42	75	55	30	36	47	30	2314	110	232	137	M8	41	0.91	119	107	98
RCK70-45x75	45	75	55	30	36	47	30	2657	118	232	137	M8	41	0.89	119	107	98
RCK70-48x80	48	80	55	30	36	47	30	2775	116	213	132	M8	41	1.00	124	113	103
RCK70-50x80	50	80	55	30	36	47	30	3011	120	213	132	M8	41	0.95	124	113	103
RCK70-55x85	55	85	55	30	36	47	30	3729	136	218	142	M8	41	1.02	137	123	112
RCK70-60x90	60	90	55	30	36	47	30	3949	132	194	153	M8	41	1.11	151	135	121
RCK70-65x95	65	95	55	30	36	47	30	4970	153	208	137	M8	41	1.19	150	136	124
RCK70-70x110	70	110	67	40	46	57	35	8128	232	220	140	M10	83	2.20	176	159	144
RCK70-75x115	75	115	72	40	46	62	35	8694	232	205	135	M10	83	2.53	180	163	149
RCK70-80x120	80	120	72	40	46	62	35	9458	236	196	127	M10	83	2.66	183	167	153
RCK70-85x125	85	125	72	40	46	62	35	11167	263	205	142	M10	83	2.79	201	181	164
RCK70-90x130	90	130	72	40	46	62	35	11970	266	196	135	M10	83	2.93	204	185	168
RCK70-95x135	95	135	72	40	46	62	35	13950	294	205	145	M10	83	3.06	220	197	178
RCK70-100x145	100	145	89	46	52	77	45	18295	366	211	145	M12	145	4.54	236	212	192
RCK70-110x155	110	155	89	46	52	77	45	20144	366	192	136	M12	145	4.92	244	221	201
RCK70-120x165	120	165	89	46	52	77	45	26345	439	211	152	M12	145	5.28	277	246	221
RCK70-130x180	130	180	89	46	52	77	45	28135	433	192	137	M12	145	5.52	284	257	234
RCK70-140x190	140	190	98	51	59	84	45	36177	517	192	142	M14	230	7.25	306	275	250
RCK70-150x200	150	200	98	51	59	84	45	43476	580	201	150	M14	230	7.65	333	297	267
RCK70-160x210	160	210	98	51	59	84	45	49466	618	201	150	M14	230	8.16	349	311	280
RCK70-170x225	170	225	98	51	59	84	45	44452	523	160	120	M14	230	8.75	334	307	283
RCK70-180x235	180	235	98	51	59	84	45	48901	543	157	117	M14	230	9.35	345	318	294
RCK70-190x250	190	250	98	51	59	84	45	65000	684	192	146	M14	230	10.80	409	367	331
RCK70-200x260	200	260	98	51	59	84	45	68000	680	184	141	M14	230	11.30	417	376	341

*Minimum outside diameter of hubs manufactured in medium carbon steel with yield strength ≥ 320 N/mm².
For hub types, and other materials, refer to page 3.
For assembly and disassembly instructions refer to page 24.

Tel: +44 121 360 0155 Fax: +44 121 325 1079 Email: sales@crossmorse.com

Clamping Elements Type RCK 71

CROSS+MORSE

The RCK 71 is a type RCK 70 with addition of a distance ring to prevent axial movement of the hub during clamping. Due to the additional friction between the element and hub during clamping maximum torques are reduced, but with reduction in surface pressures also. This design can be mounted within the confines of a hub providing a stepped bore is provided to accommodate the flange.

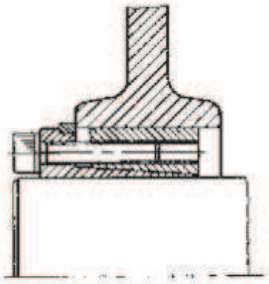

Recommended tolerances for full torque transmission are:-

Shaft h8
Hub H8

Clamping surfaces to be finished to Rz ≤ 15 μm.

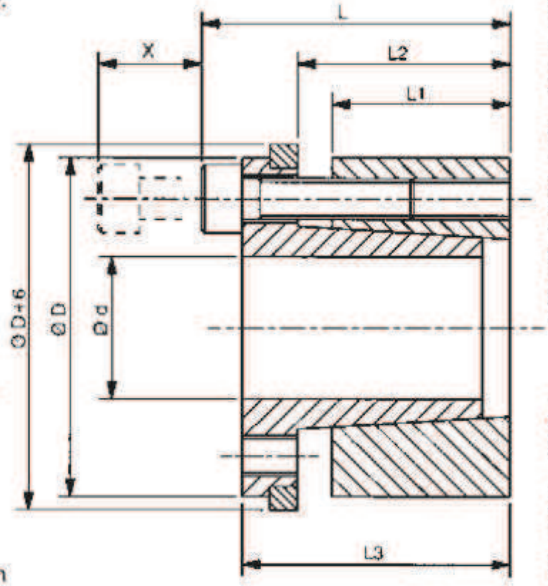

X = Distance required to remove screws, additional clearance for alan key may be required.

Dimensions

Part No.	Dimensions mm							Torque Cap. M Nm	Axial Force F kN	Surface Pressure		Clamping Screws		Approx. Weight	Min. Hub Dia* mm		
	d	D	L	L_1	L_2	L_3	X			Shaft Ps N/mm²	Hub Ph N/mm²	Size	Torque Nm	kg	Assy Type A	Assy Type B	Assy Type C
RCK71-19x47	19	47	45	26	31	39	25	294	31	228	96	M6	17	0.39	64	60	56
RCK71-20x47	20	47	45	26	31	39	25	313	31	226	96	M6	17	0.38	64	60	56
RCK71-22x47	22	47	45	26	31	39	25	362	33	206	97	M6	17	0.37	64	60	56
RCK71-24x50	24	50	45	26	31	39	25	421	35	206	100	M6	17	0.41	69	65	60
RCK71-25x50	25	50	45	26	31	39	25	470	38	221	110	M6	17	0.40	72	66	62
RCK71-28x55	28	55	45	26	31	39	25	578	41	202	105	M6	17	0.48	77	72	67
RCK71-30x55	30	55	45	26	31	39	25	637	42	221	118	M6	17	0.45	81	75	69
RCK71-32x60	32	60	45	26	31	39	25	784	49	197	114	M6	17	0.56	87	80	75
RCK71-35x60	35	60	45	26	31	39	25	843	48	202	118	M6	17	0.52	88	81	75
RCK71-38x65	38	65	45	26	31	39	25	1010	53	197	121	M6	17	0.62	97	89	82
RCK71-40x65	40	65	45	26	31	39	25	1108	55	234	143	M6	17	0.59	105	94	86
RCK71-42x75	42	75	55	30	36	47	30	1892	90	216	135	M8	41	0.97	118	107	97
RCK71-45x75	45	75	55	30	36	47	30	1912	85	216	135	M8	41	0.95	118	107	97
RCK71-48x80	48	80	55	30	36	47	30	2137	89	221	142	M8	41	1.07	129	116	105
RCK71-50x80	50	80	55	30	36	47	30	2167	87	221	143	M8	41	1.02	129	116	105
RCK71-55x85	55	85	55	30	36	47	30	2677	97	221	143	M8	41	1.09	137	124	112
RCK71-60x90	60	90	55	30	36	47	30	2853	95	197	131	M8	41	1.19	139	126	116
RCK71-65x95	65	95	55	30	36	47	30	3500	108	206	142	M8	41	1.27	153	138	125
RCK71-70x110	70	110	67	40	46	57	35	5717	163	221	142	M10	83	2.03	177	159	145
RCK71-75x115	75	115	72	40	46	62	35	6207	166	216	148	M10	83	2.65	190	170	153
RCK71-80x120	80	120	72	40	46	62	35	6707	168	198	139	M10	83	2.78	191	172	157
RCK71-85x125	85	125	72	40	46	62	35	8002	188	216	157	M10	83	2.92	214	189	169
RCK71-90x130	90	130	72	40	46	62	35	8502	189	197	143	M10	83	3.07	210	189	171
RCK71-95x135	95	135	72	40	46	62	35	10002	211	187	138	M10	83	3.21	214	193	176
RCK71-100x145	100	145	89	46	52	77	45	13336	267	197	148	M12	145	4.80	239	214	193
RCK71-110x155	110	155	89	46	52	77	45	14582	265	197	178	M12	145	5.20	290	250	219
RCK71-120x165	120	165	89	46	52	77	45	19083	318	216	158	M12	145	5.58	283	251	224
RCK71-130x180	130	180	89	46	52	77	45	20417	314	198	143	M12	145	5.86	291	262	237
RCK71-140x190	140	190	98	51	59	84	45	24920	356	188	138	M14	230	7.62	301	272	248
RCK71-150x200	150	200	98	51	59	84	45	30130	402	198	149	M14	230	8.04	331	296	266
RCK71-160x210	160	210	98	51	59	84	45	32520	407	198	149	M14	230	8.56	348	311	280
RCK71-170x225	170	225	98	51	59	84	45	33350	392	158	119	M14	230	9.19	333	306	282
RCK71-180x235	180	235	98	51	59	84	45	33600	373	154	119	M14	230	9.83	347	319	295
RCK71-190x250	190	250	98	51	59	84	45	46400	488	150	114	M14	230	11.35	363	335	311
RCK71-200x260	200	260	98	51	59	84	45	48200	482	144	110	M14	230	11.90	372	345	321

*Minimum outside diameter of hubs manufactured in medium carbon steels with yield strength ≥ 320 N/mm².
For hub types, and other materials, refer to page 3.
For assembly and disassembly instructions refer to page 24.

Tel: +44 121 360 0155
Fax: +44 121 325 1079
Email: sales@crossmorse.com

Clamping Elements Type RCK 80

Available for shaft diameters down to 6mm, these shaft clamping elements are designed to fit into small diameter hubs, being particularly suited to light duty, light torque applications. A spacer ring prevents axial movement during clamping; and design ensures good levels of concentricity.
For correct operation of these units, the hub diameter should not be less than the flange diameter D_2, even though with many materials stress limits would allow selection of smaller hub diameters.

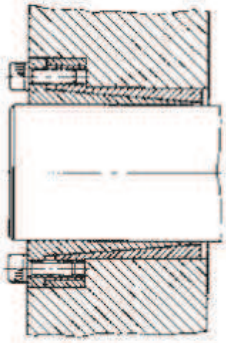

Recommended tolerances for full torque transmission are:-

Shaft	h8
Hub	H8

Clamping surfaces to be finished to Rz ≤ 15 μm.

X = Distance required to remove screws, additional clearance for alan key may be required.

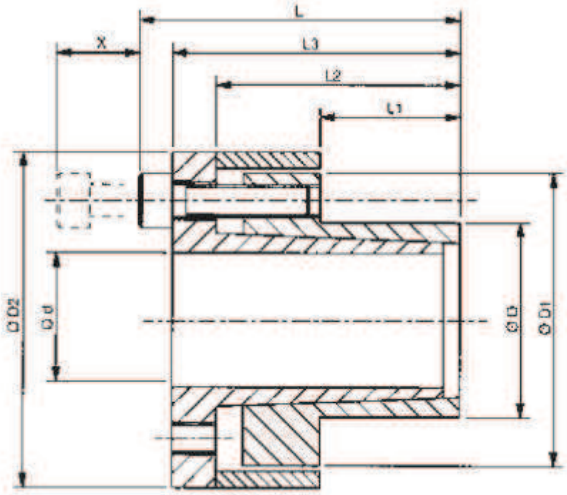

Dimensions

Part No.	Dimensions mm									Torque Cap. M Nm	Axial Force F kN	Surface Pressure		Clamping Screws		Approx Weight	Min. Hub Dia* mm		
	d	D	D_1	D_2	L	L_1	L_2	L_3	X			Shaft Ps N/mm²	Hub Ph N/mm²	Size	Torque Nm	kg	Assy Type A	Assy Type B	Assy Type C
RCK80-6x14	6	14	23	25	25.5	10	19	23	10	12	4	187	80	M3	2.2	0.04	18	18	17
RCK80-8x15	8	15	24	28	28.0	12	21	24	12	28	7	197	105	M4	5	0.05	21	20	19
RCK80-9x16	9	16	28	32	31.0	14	23	27	12	31	7	164	92	M4	5	0.07	22	21	19
RCK80-10x16	10	16	28	32	31.0	14	23	27	12	40	8	144	90	M4	5	0.06	22	21	19
RCK80-11x18	11	18	30	34	31.0	14	23	27	12	51	9	175	107	M4	5	0.09	26	24	22
RCK80-12x18	12	18	30	34	31.0	14	23	27	12	56	9	161	107	M4	5	0.08	26	24	22
RCK80-14x23	14	23	35	39	31.0	14	23	27	12	64	9	138	84	M4	5	0.18	30	29	27
RCK80-15x24	15	24	40	45	42.0	16	29	36	18	145	19	162	101	M6	17	0.22	34	31	29
RCK80-16x24	16	24	40	45	42.0	16	29	36	18	155	19	152	101	M6	17	0.21	34	31	29
RCK80-17x26	17	26	42	47	45.5	18	32	38	18	170	20	191	125	M6	17	0.21	40	36	33
RCK80-18x26	18	26	42	47	44.0	18	31	38	18	158	18	160	111	M6	17	0.24	38	35	33
RCK80-19x27	19	27	43	48	44.0	18	31	38	18	199	21	152	107	M6	17	0.25	39	36	33
RCK80-20x28	20	28	44	49	44.0	18	31	45	18	210	21	144	103	M6	17	0.26	39	37	34
RCK80-22x32	22	32	48	54	51.0	25	38	45	18	232	21	113	78	M6	17	0.35	41	39	37
RCK80-24x34	24	34	50	56	52.5	25	38	45	18	253	21	103	73	M6	17	0.36	43	41	39
RCK80-25x34	25	34	50	56	52.5	25	38	45	18	263	21	99	73	M6	17	0.40	43	41	39
RCK80-28x39	28	39	55	61	52.5	25	38	45	18	428	31	111	80	M6	17	0.42	51	48	46
RCK80-30x41	30	41	57	63	52.5	25	38	45	18	474	32	124	91	M6	17	0.44	55	52	49
RCK80-32x43	32	43	59	65	56.0	30	43	50	18	600	38	97	72	M6	17	0.46	54	52	50
RCK80-35x47	35	47	63	69	56.0	30	43	50	18	737	42	118	88	M6	17	0.57	63	59	56
RCK80-38x50	38	50	66	72	56.0	30	43	50	18	800	42	109	83	M6	17	0.60	66	62	59
RCK80-40x53	40	53	69	75	58.0	32	45	52	18	947	47	109	82	M6	17	0.66	69	66	62
RCK80-42x55	42	55	71	77	58.0	32	45	52	18	994	47	103	79	M6	17	0.71	71	68	64
RCK80-45x59	45	59	79	85	72.0	40	56	64	22	1750	78	127	97	M8	41	1.14	81	76	71
RCK80-48x62	48	62	82	88	72.0	40	56	64	22	1867	78	119	92	M8	41	1.40	84	79	74
RCK80-50x65	50	65	85	92	82.0	50	66	74	22	2431	97	127	98	M8	41	1.58	90	84	79
RCK80-55x71	55	71	91	98	82.0	50	66	74	22	2674	97	105	81	M8	41	2.00	92	88	83
RCK80-60x77	60	77	97	104	82.0	50	66	74	22	2917	97	95	74	M8	41	2.30	98	93	89
RCK80-65x84	65	84	104	111	82.0	50	66	74	22	3160	97	89	69	M8	41	2.50	105	100	96
RCK80-70x90	70	90	115	122	101.0	60	80	91	25	4322	123	86	67	M10	83	2.83	112	107	103
RCK80-75x95	75	95	119	126	101.0	60	80	91	25	6171	165	94	74	M10	83	3.10	121	115	110
RCK80-80x100	80	100	124	131	106.0	65	85	96	25	7899	197	96	77	M10	83	3.27	128	122	116
RCK80-85x106	85	106	130	137	106.0	65	85	96	25	8393	197	91	73	M10	83	3.50	134	128	122
RCK80-90x112	90	112	136	143	106.0	65	85	96	25	10367	230	63	51	M10	83	3.80	132	128	124
RCK80-95x120	95	120	144	153	106.0	65	85	96	25	10943	230	95	75	M10	83	4.20	153	145	139
RCK80-100x125	100	125	153	162	114.0	65	89	102	25	14520	290	114	91	M10	83	4.90	168	158	149
RCK80-110x140	110	140	168	177	119.0	70	94	107	30	15972	290	95	75	M12	145	5.80	178	170	162
RCK80-120x155	120	155	185	195	139.0	90	114	127	30	23231	387	92	71	M12	145	6.60	195	186	178
RCK80-130x165	130	165	195	205	139.0	90	114	127	30	25168	387	84	66	M12	145	7.30	204	195	187
RCK80-140x175	140	175	205	215	139.0	90	114	127	30	27104	387	79	63	M12	145	7.90	214	206	197
RCK80-150x185	150	185	215	225	139.0	90	114	127	30	29041	387	73	59	M12	145	8.70	223	215	207

For the unit to function correctly hub diameter should not be less than the flange outside diameter D_2.
*Minimum outside diameter of hubs manufactured in medium carbon steels with yield strength ≥ 320 N/mm².
For hub types, and other materials, refer to page 3.
For assembly and disassembly instructions refer to page 24.

Tel: +44 121 360 0155 Fax: +44 121 325 1079 Email: sales@crossmorse.com

Clamping Elements Type ACE 81

Available for shaft diameters down to 11mm, these shaft clamping elements are designed to fit into very small diameter hubs, being particularly suited to Timing pulley and overload clutch applications. A spacer ring prevents axial movement during clamping; and design ensures good levels of concentricity. For correct operation of these units, the hub diameter should not be less than the flange diameter D_2, even though with many materials stress limits would allow selection of smaller hub diameters.

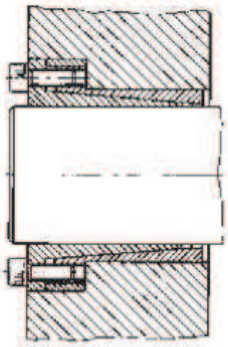

Recommended tolerances for full torque transmission are:-

Shaft	h8
Hub	H8

Clamping surfaces to be finished to Rz ≤ 15 μm.

X = Distance required to remove screws, additional clearance for alan key may be required.

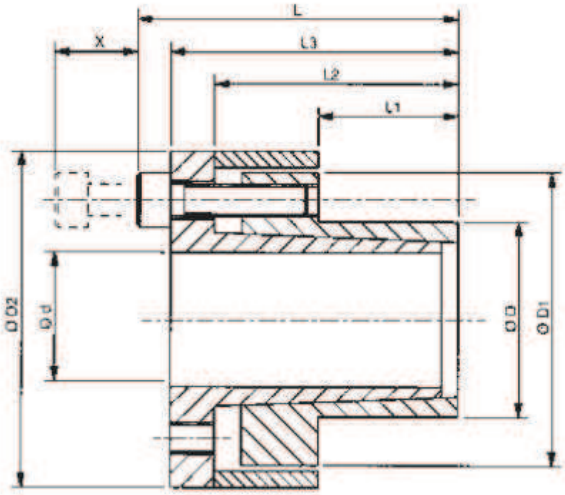

Dimensions

Part No.	Dimensions mm									Torque Cap. M	Axial Force F	Surface Pressure		Clamping Screws		Approx Weight	Min. Hub Dia* mm		
	d	D	D_1	D_2	L	L_1	L_2	L_3	X	Nm	kN	Shaft Ps N/mm²	Hub Ph N/mm²	Size	Torque Nm	kg	Assy Type A	Assy Type B	Assy Type C
ACE81-10x26	10	26	37.5	40.5	31.5	14	22.5	27.5	12	45	9.0	260	100	M4	5	0.22	36	34	32
ACE81-11x26	11	26	37.5	40.5	31.5	14	22.5	27.5	12	50	9.1	236	100	M4	5	0.22	36	34	32
ACE81-12x26	12	26	37.5	40.5	31.5	14	22.5	27.5	12	54	9.0	217	100	M4	5	0.22	36	34	32
ACE81-14x26	14	26	37.5	40.5	31.5	14	22.5	27.5	12	90	14.5	186	100	M4	5	0.22	36	34	32
ACE81-15x26	15	26	37.5	40.5	31.5	14	22.5	27.5	12	109	14.5	173	100	M4	5	0.22	36	34	32
ACE81-16x26	16	26	37.5	40.5	31.5	14	22.5	27.5	12	116	14.5	163	100	M4	5	0.22	36	34	32
ACE81-18x26	18	26	37.5	40.5	31.5	14	22.5	27.5	12	130	14.5	144	100	M4	5	0.22	36	34	32
ACE81-19x26	19	26	37.5	40.5	31.5	14	22.5	27.5	12	138	14.5	137	100	M4	5	0.22	36	34	32
ACE81-20x26	20	26	37.5	40.5	31.5	14	22.5	27.5	12	145	14.5	130	100	M4	5	0.22	36	34	32
ACE81-19x38	19	38	53.0	57.0	39	14	26	33	18	205	22	208	104	M6	17	0.32	54	50	47
ACE81-20x38	20	38	53.0	57.0	39	14	26	33	18	215	22	198	104	M6	17	0.32	54	50	47
ACE81-22x38	22	38	53.0	57.0	39	14	26	33	18	240	22	180	104	M6	17	0.32	54	50	47
ACE81-24x38	24	38	53.0	57.0	39	14	26	33	18	265	22	165	104	M6	17	0.32	54	50	47
ACE81-25x38	25	38	53.0	57.0	39	14	26	33	18	276	22	158	104	M6	17	0.32	54	50	47
ACE81-28x38	28	38	53.0	57.0	39	14	26	33	18	309	22	141	104	M6	17	0.32	54	50	47
ACE81-30x38	30	38	53.0	57.0	39	14	26	33	18	331	22	132	104	M6	17	0.32	54	50	47
ACE81-19x38H	19	38	53.0	57.0	52	27	39	46	18	314	33	162	81	M6	17	0.40	50	47	45
ACE81-20x38H	20	38	53.0	57.0	52	27	39	46	18	331	33	154	81	M6	17	0.40	50	47	45
ACE81-22x38H	22	38	53.0	57.0	52	27	39	46	18	364	33	140	81	M6	17	0.40	50	47	45
ACE81-24x38H	24	38	53.0	57.0	52	27	39	46	18	397	33	128	81	M6	17	0.40	50	47	45
ACE81-25x38H	25	38	53.0	57.0	52	27	39	46	18	413	33	123	81	M6	17	0.40	50	47	45
ACE81-28x38H	28	38	53.0	57.0	52	27	39	46	18	465	33	110	81	M6	17	0.40	50	47	45
ACE81-30x38H	30	38	53.0	57.0	52	27	39	46	18	497	33	103	81	M6	17	0.40	50	47	45
ACE81-24x52	24	52	66.5	70.5	52	27	39	46	18	529	44	171	79	M6	17	0.60	67	64	61
ACE81-25x52	25	52	66.5	70.5	52	27	39	46	18	552	44	164	79	M6	17	0.60	67	64	61
ACE81-28x52	28	52	66.5	70.5	52	27	39	46	18	618	44	147	79	M6	17	0.60	67	64	61
ACE81-30x52	30	52	66.5	70.5	52	27	39	46	18	662	44	137	79	M6	17	0.60	67	64	61
ACE81-32x52	32	52	66.5	70.5	52	27	39	46	18	706	44	128	79	M6	17	0.60	67	64	61
ACE81-35x52	35	52	66.5	70.5	52	27	39	46	18	772	44	117	79	M6	17	0.60	67	64	61
ACE81-38x52	38	52	66.5	70.5	52	27	39	46	18	839	44	108	79	M6	17	0.60	67	64	61
ACE81-40x52	40	52	66.5	70.5	52	27	39	46	18	883	44	103	79	M6	17	0.60	67	64	61
ACE81-42x52	42	52	66.5	70.5	52	27	39	46	18	926	44	98	79	M6	17	0.60	67	64	61
ACE81-28x72	28	72	91.5	96.5	68	37	52	60	22	1462	104	255	99	M8	41	1.50	100	93	87
ACE81-30x72	30	72	91.5	96.5	68	37	52	60	22	1567	104	238	99	M8	41	1.50	100	93	87
ACE81-32x72	32	72	91.5	96.5	68	37	52	60	22	1671	104	223	99	M8	41	1.50	100	93	87
ACE81-35x72	35	72	91.5	96.5	68	37	52	60	22	1828	104	204	99	M8	41	1.50	100	93	87
ACE81-38x72	38	72	91.5	96.5	68	37	52	60	22	1985	104	188	99	M8	41	1.50	100	93	87
ACE81-40x72	40	72	91.5	96.5	68	37	52	60	22	2089	104	178	99	M8	41	1.50	100	93	87
ACE81-42x72	42	72	91.5	96.5	68	37	52	60	22	2194	104	170	99	M8	41	1.50	100	93	87
ACE81-45x72	45	72	91.5	96.5	68	37	52	60	22	2350	104	158	99	M8	41	1.50	100	93	87
ACE81-48x72	48	72	91.5	96.5	68	37	52	60	22	2506	104	149	99	M8	41	1.50	100	93	87
ACE81-50x72	50	72	91.5	96.5	68	37	52	60	22	2611	104	143	99	M8	41	1.50	100	93	87
ACE81-55x72	55	72	91.5	96.5	68	37	52	60	22	2872	104	130	99	M8	41	1.50	100	93	87
ACE81-60x72	60	72	91.5	96.5	68	37	52	60	22	3133	104	119	99	M8	41	1.50	100	93	87

For the unit to function correctly hub diameter should not be less than the flange outside diameter D_2.
*Minimum outside diameter of hubs manufactured in medium carbon steels with yield strength ≥ 320 N/mm².
For hub types, and other materials, refer to page 3.
For assembly and disassembly instructions refer to page 24.

Tel: +44 121 360 0155 Fax: +44 121 325 1079 Email: sales@crossmorse.com

Clamping Elements Type RCK 40

These are the original type of shaft clamping elements, proven in a wide range of applications for more than 20 years. Suited to more general applications, this series provides medium torque transmission, which can be increased by mounting the unit in series. This type does not provide self centring, and therefore other methods of centring the hub to the shaft are required. The units do not move axially during clamping and generally self-release when clamping screws are relaxed.

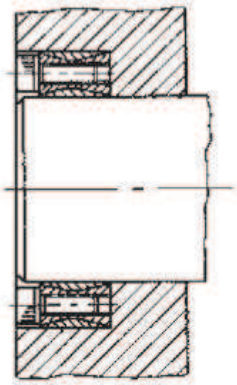

Recommended tolerances for full torque transmission are:-

Shaft	h9
Hub	H9

As both cones are split larger tolerances, up to h11/H11 can be accommodated, but with a reduction in torque capacity. Clamping surfaces to be finished to Rz ≤ 15 μm.

If two or more elements are used in series the resultant torque will be proportionally increased. However the minimum hub dia. must be increased to accommodate the extra stress.

X = Distance required to remove screws, additional clearance for alan key may be required.

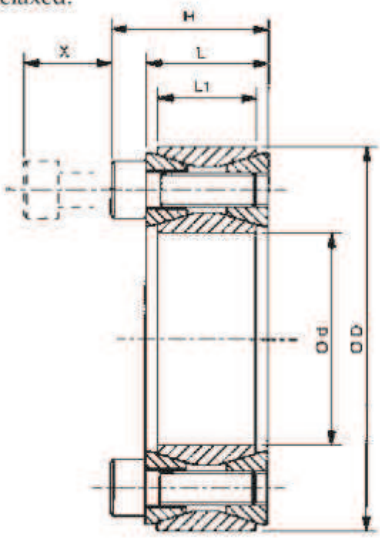

Dimensions

Part No. †	Dimensions mm						Torque Cap. M Nm	Axial Force F kN	Surface Pressure		Clamping Screws		Extraction Screws	Approx Weight	Min. Hub Dia* mm		
	d	D	L	L_1	H	X			Shaft Ps N/mm²	Hub Ph N/mm²	Size	Torque Nm	Size	kg	Assy Type A	Assy Type B	Assy Type C
RCK40-18x47	18	47	20	17	28	18	250	28	235	92	M5	15	M8	0.26	63	59	56
RCK40-19x47	19	47	20	17	28	18	265	28	235	92	M6	15	M8	0.25	63	59	56
RCK40-20x47	20	47	20	17	28	18	280	28	208	92	M6	15	M8	0.24	63	59	56
RCK40-22x47	22	47	20	17	28	18	310	28	192	92	M6	15	M8	0.23	63	59	56
RCK40-24x50	24	50	20	17	28	18	370	31	192	94	M6	15	M8	0.26	68	64	60
RCK40-25x50	25	50	20	17	28	18	390	31	187	94	M6	15	M8	0.25	68	64	60
RCK40-28x55	28	55	20	17	28	18	490	35	153	94	M6	15	M8	0.30	74	70	66
RCK40-30x55	30	55	20	17	28	18	520	35	173	94	M6	15	M8	0.29	74	70	66
RCK40-32x60	32	60	20	17	28	18	680	43	205	105	M6	15	M8	0.34	84	79	73
RCK40-35x60	35	60	20	17	28	18	710	41	180	105	M6	15	M8	0.32	84	79	73
RCK40-38x65	38	65	20	17	28	18	880	46	176	108	M6	15	M8	0.36	92	86	80
RCK40-40x65	40	65	20	17	28	18	930	47	176	108	M6	15	M8	0.34	92	86	80
RCK40-42x75	42	75	20	17	28	18	1580	75	235	123	M6	15	M8	0.60	112	103	95
RCK40-45x75	45	75	24	20	34	22	1620	72	206	123	M8	37	M10	0.57	112	103	95
RCK40-48x80	48	80	24	20	34	22	1690	70	186	108	M8	37	M10	0.63	114	106	98
RCK40-50x80	50	80	24	20	34	22	1770	71	187	113	M8	37	M10	0.60	116	107	99
RCK40-55x85	55	85	24	20	34	22	2260	82	196	127	M8	37	M10	0.63	129	118	108
RCK40-60x90	60	90	24	20	34	22	2450	82	177	120	M8	37	M10	0.69	133	123	113
RCK40-65x95	65	95	24	20	34	22	3040	94	188	128	M8	37	M10	0.73	145	132	121
RCK40-70x110	70	110	28	24	40	25	4560	130	206	127	M10	70	M12	1.26	167	153	140
RCK40-75x115	75	115	28	24	40	25	4820	129	191	124	M10	70	M12	1.33	173	158	146
RCK40-80x120	80	120	28	24	40	25	5130	128	177	120	M10	70	M12	1.40	178	164	151
RCK40-85x125	85	125	28	24	40	25	6230	147	191	127	M10	70	M12	1.49	190	174	159
RCK40-90x130	90	130	28	24	40	25	6520	145	176	122	M10	70	M12	1.53	194	178	164
RCK40-95x135	95	135	28	24	40	25	7770	164	191	133	M10	70	M12	1.62	210	191	174
RCK40-100x145	100	145	33	26	47	30	9460	189	193	133	M12	127	M14	2.01	226	205	187
RCK40-110x155	110	155	33	26	47	30	10490	191	176	122	M12	127	M14	2.15	232	212	196
RCK40-120x165	120	165	33	26	47	30	12945	216	182	132	M12	127	M14	2.35	256	233	213
RCK40-130x180	130	180	38	34	47	30	17360	267	159	115	M12	127	M14	3.51	262	242	224
RCK40-140x190	140	190	38	34	52	35	20650	295	163	120	M12	127	M14	3.85	282	259	239
RCK40-150x200	150	200	38	34	52	35	23815	318	164	123	M12	127	M14	4.07	300	275	253
RCK40-160x210	160	210	38	34	52	35	27615	345	167	127	M12	127	M14	4.30	320	292	268
RCK40-170x225	170	225	44	38	60	40	32370	381	155	117	M14	195	M16	5.78	330	304	281
RCK40-180x235	180	235	44	38	60	40	37270	414	159	122	M14	195	M16	6.05	351	322	297
RCK40-190x250	190	250	52	46	68	45	45810	482	145	110	M14	195	M16	8.25	358	332	308
RCK40-200x260	200	260	52	46	68	45	51600	516	148	114	M14	195	M16	8.65	377	348	323

*Minimum outside diameter of hubs manufactured in medium carbon steels with yield strength ≥ 320 N/mm².
For hub types, and other materials, refer to page 3. For assembly and disassembly instructions refer to page 24.

† Clamping Elements with inch bores are also available to order.

Tel: +44 121 360 0155 Fax: +44 121 325 1079 Email: sales@crossmorse.com

Clamping Elements Type RCK 40

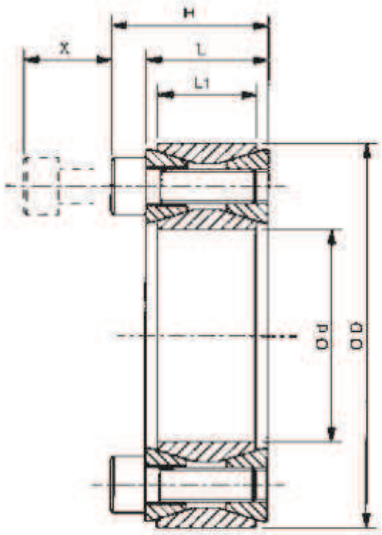

Dimensions

Part No. †	Dimensions mm						Torque Cap. M	Axial Force F	Surface Pressure		Clamping Screws		Extraction Screws	Approx Weight	Min. Hub Dia* mm		
	d	D	L	L_1	H	X	Nm	kN	Shaft Ps N/mm²	Hub Ph N/mm²	Size	Torque Nm	Size	kg	Assy Type A	Assy Type B	Assy Type C
RCK40-220x285	220	285	56	50	74	50	66800	607	145	112	M16	290	M18	11.3	411	380	353
RCK40-240x305	240	305	56	50	74	50	93200	777	170	134	M16	290	M18	12.3	477	432	394
RCK40-260x325	260	325	56	50	74	50	114500	881	178	143	M16	290	M18	13.3	525	472	427
RCK40-280x355	280	355	66	60	86	60	141000	1007	158	124	M18	410	M20	19.3	535	490	450
RCK40-300x375	300	375	66	60	86	60	170000	1133	166	133	M18	410	M20	20.5	583	529	483
RCK40-320x405	320	405	78	70	100	70	235500	1472	173	137	M20	590	M22	29.5	639	578	526
RCK40-340x425	340	425	78	70	100	70	250000	1471	163	130	M20	590	M22	31.1	654	596	545
RCK40-360x455	360	455	90	80	114	80	329000	1828	167	132	M22	790	M24	42.7	706	641	586
RCK40-380x475	380	475	90	80	114	80	346400	1823	158	126	M22	790	M24	44.8	721	659	605
RCK40-400x495	400	495	90	80	114	80	365000	1825	150	121	M22	790	M24	46.9	738	677	624
RCK40-420x515	420	515	90	80	114	80	430000	2048	160	131	M22	790	M24	49.0	795	723	661
RCK40-440x545	440	545	102	90	132	90	492000	2236	149	120	M24	1000	M24	64.7	808	743	685
RCK40-460x565	460	565	102	90	132	90	514000	2235	142	116	M24	1000	M24	67.3	825	761	704
RCK40-480x585	480	585	102	90	132	90	563000	2346	143	117	M24	1000	M24	70.0	859	791	732
RCK40-500x605	500	605	102	90	132	90	615000	2460	144	119	M24	1000	M24	72.6	894	822	759
RCK40-520x630	520	630	102	90	132	90	654000	2515	141	117	M24	1000	M24	79.2	923	851	787
RCK40-540x650	540	650	102	90	132	90	679000	2515	136	113	M24	1000	M24	81.9	941	869	806
RCK40-560x670	560	670	102	90	132	90	751000	2682	140	117	M24	1000	M24	84.7	983	906	837
RCK40-580x690	580	690	102	90	132	90	810000	2793	141	118	M24	1000	M24	87.4	1017	936	865
RCK40-600x710	600	710	102	90	132	90	838000	2793	136	115	M24	1000	M24	90.2	1034	955	884
RCK40-620x730	620	730	102	90	132	90	901000	2906	137	116	M24	1000	M24	92.9	1069	985	911
RCK40-640x750	640	750	102	90	132	90	966000	3019	138	118	M24	1000	M24	95.7	1103	1016	939
RCK40-660x770	660	770	102	90	132	90	1030000	3121	131	112	M24	1000	M24	98.4	1110	1027	953
RCK40-680x790	680	790	102	90	132	90	1070000	3147	128	110	M24	1000	M24	101.2	1130	1048	974
RCK40-700x810	700	810	102	90	132	90	1150000	3286	130	112	M24	1000	M24	103.9	1167	1080	1002
RCK40-720x830	720	830	102	90	132	90	1190000	3306	127	110	M24	1000	M24	106.7	1188	1101	1023
RCK40-740x850	740	850	102	90	132	90	1270000	3432	129	112	M24	1000	M24	109.4	1225	1133	1052
RCK40-760x870	760	870	102	90	132	90	1350000	3553	129	113	M24	1000	M24	112.2	1258	1163	1079
RCK40-780x890	780	890	102	90	132	90	1390000	3564	127	111	M24	1000	M24	114.9	1278	1183	1099
RCK40-800x910	800	910	102	90	132	90	1450000	3625	125	110	M24	1000	M24	117.7	1302	1207	1122
RCK40-820x930	820	930	102	90	132	90	1530000	3732	126	111	M24	1000	M24	120.5	1336	1237	1149
RCK40-840x950	840	950	102	90	132	90	1620000	3857	127	112	M24	1000	M24	123.2	1369	1267	1176
RCK40-860x970	860	970	102	90	132	90	1690000	3930	126	112	M24	1000	M24	126.0	1398	1293	1200
RCK40-880x990	880	990	102	90	132	90	1770000	4023	126	112	M24	1000	M24	128.7	1427	1320	1225
RCK40-900x1010	900	1010	102	90	132	90	1840000	4089	126	112	M24	1000	M24	131.5	1456	1347	1250
RCK40-920x1030	920	1030	102	90	132	90	1900000	4130	124	111	M24	1000	M24	134.2	1479	1370	1272
RCK40-940x1050	940	1050	102	90	132	90	1990000	4234	124	111	M24	1000	M24	137.0	1508	1396	1297
RCK40-960x1070	960	1070	102	90	132	90	2080000	4333	125	112	M24	1000	M24	139.7	1542	1427	1324
RCK40-980x1090	980	1090	102	90	132	90	2160000	4408	125	112	M24	1000	M24	142.5	1571	1453	1349
RCK40-1000x1110	1000	1110	102	90	132	90	2230000	4460	123	111	M24	1000	M24	145.2	1594	1476	1371

*Minimum outside diameter of hubs manufactured in medium carbon steels with yield strength ≥ 320 N/mm².
For hub types, and other materials, refer to page 3. For assembly and disassembly instructions refer to page 24.
† Clamping Elements with inch bores are also available to order.

Tel: +44 121 360 0155
Fax: +44 121 325 1079
Email: sales@crossmorse.com

Clamping Elements Type RCK 10 to 12

These shaft clamping elements provide maximum torque transmission from a single unit, but, due to their large clamping surfaces clamping pressures are kept to reasonable levels. The design enables automatic centring between shaft and hub, and axial positioning of the hub does not change during clamping. Suitable for applications with high bending loads.

These units are offered in three series. A light duty series RCK 10, a normal duty series RCK 11, and a Heavy duty series RCK 12 for maximum torque applications.

For thin walled hubs, such as Conveyor Drums, the surface pressure on the hub can be reduced by reduction of the clamping torque applied to the Clamping Screws down to a minimum of 50%; the pressure on the outer hub and torque transmitted being reduced proportionaly, so that wall thickness of 12% of the internal diameter can be used.

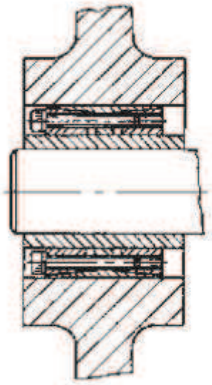

Recommended tolerances for full torque transmission both shaft and hub should be within the following tolerances:

Shaft	h8
Hub	H8

Clamping surfaces to be finished to Rz ≤ 15 μm.

These units ideal for mounting of wheels and belt conveyor pulleys.

X = Distance required to remove screws, additional clearance for alan key may be required.

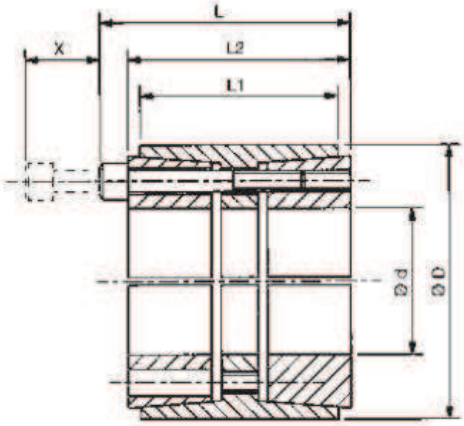

Dimensions

Part No.	Dimensions mm						Torque Cap. M Nm	Axial Force F kN	Surface Pressure		Clamping Screws		Extraction Screws	Approx Weight	Min. Hub Dia* mm		
	d	D	L	L_1	L_2	X			Shaft Ps N/mm²	Hub Ph N/mm²	Size	Torque Nm	Size	kg	Assy Type A	Assy Type B	Assy Type C
RCK 10-70x110	70	110	72	54	62	50	7270	208	245	125	M10	83	M10	2.2	166	152	140
RCK 10-75x115	75	115	72	54	62	50	7780	207	236	120	M10	83	M10	2.4	171	157	145
RCK 10-80x120	80	120	72	54	62	50	10350	259	268	143	M10	83	M10	2.5	194	174	158
RCK 10-85x125	85	125	72	54	62	50	11000	259	259	138	M10	83	M10	2.6	198	179	163
RCK 10-90x130	90	130	72	54	62	50	12800	284	265	146	M10	83	M10	2.8	213	191	172
RCK 10-95x135	95	135	72	54	62	50	13500	284	254	140	M10	83	M10	2.9	216	195	177
RCK 10-100x145	100	145	84	64	72	60	19400	388	279	148	M12	145	M12	4.1	239	214	193
RCK 10-110x155	110	155	84	64	72	60	21400	389	252	139	M12	145	M12	4.4	247	223	202
RCK 10-120x165	120	165	84	64	72	60	25600	427	255	144	M12	145	M12	4.8	268	241	218
RCK 10-130x180	130	180	94	74	82	70	35400	545	257	149	M12	145	M12	6.6	298	266	240
RCK 10-140x190	140	190	94	74	82	70	40800	583	255	151	M12	145	M12	7.0	317	283	254
RCK 10-150x200	150	200	94	74	82	70	43700	583	237	144	M12	145	M12	7.5	325	292	264
RCK 10-160x210	160	210	94	74	82	70	49800	623	237	145	M12	145	M12	7.9	342	307	278
RCK 10-170x225	170	225	107	74	93	75	67500	794	236	146	M14	230	M14	10.6	368	330	298
RCK 10-180x235	180	235	107	74	93	75	71500	794	225	140	M14	230	M14	11.1	376	339	307
RCK 10-190x250	190	250	119	95	105	80	80500	847	190	118	M14	230	M14	14.6	368	339	313
RCK 10-200x260	200	260	119	95	105	80	95000	950	201	128	M14	230	M14	15.3	397	362	332
RCK 10-220x285	220	285	127	100	111	90	119000	1082	204	124	M16	355	M16	19.3	429	393	361
RCK 10-240x305	240	305	127	100	111	90	173500	1446	245	154	M16	355	M16	20.9	515	458	411
RCK 10-260x325	260	325	127	100	111	90	197500	1519	238	152	M16	355	M16	22.6	545	485	436
RCK 10-280x355	280	355	131	100	111	90	236000	1686	263	166	M20	690	M20	28.4	631	552	490
RCK 10-300x375	300	375	131	100	111	90	270000	1800	263	168	M20	690	M20	30.3	672	587	520
RCK 10-320x405	320	405	156	122	136	110	360000	2250	244	154	M20	690	M20	45.3	684	608	545
RCK 10-340x425	340	425	156	122	136	110	382000	2247	230	147	M20	690	M20	48.0	698	625	564
RCK 10-360x455	360	455	177	140	155	120	501000	2783	231	142	M22	930	M22	65.3	733	659	598
RCK 10-380x475	380	475	177	140	155	120	529000	2784	220	135	M22	930	M22	68.7	745	675	615
RCK 10-400x495	400	495	177	140	155	120	613000	3065	233	143	M22	930	M22	72.1	801	720	652
RCK 10-420x515	420	515	177	140	155	120	702000	3343	245	150	M22	930	M22	75.4	856	764	688
RCK 10-440x535	440	535	177	140	155	120	735000	3341	235	144	M22	930	M22	78.8	869	780	706
RCK 10-460x555	460	555	177	140	155	120	769000	3343	227	139	M22	930	M22	82.2	884	798	725
RCK 10-480x575	480	575	177	140	155	120	835000	3479	228	140	M22	930	M22	85.6	919	829	752
RCK 10-500x595	500	595	177	140	155	120	870000	3480	220	135	M22	930	M22	89.1	933	845	771
RCK 10-520x615	520	615	177	140	155	120	1014000	3900	238	146	M22	930	M22	92.5	1006	902	814
RCK 10-540x635	540	635	182	145	160	120	1053000	3900	222	136	M22	930	M22	99.0	1000	905	824
RCK 10-560x655	560	655	182	145	160	120	1170000	4179	230	141	M22	930	M22	103	1051	947	859
RCK 10-580x675	580	675	182	145	160	120	1210000	4172	223	137	M22	930	M22	106	1067	965	878
RCK 10-600x695	600	695	182	145	160	120	1250000	4167	227	139	M22	930	M22	110	1107	999	907

*Minimum outside diameter of hubs manufactured in medium carbon steels with yield strength ≥ 320 N/mm².
For hub types, and other materials, refer to page 3.
For assembly and disassembly instructions refer to page 24.

Tel: +44 121 360 0155 Fax: +44 121 325 1079 Email: sales@crossmorse.com

Clamping Elements Type RCK 11 and 12

CROSS+MORSE

Dimensions

Part No. †	Dimensions mm						Torque Cap. M	Axial Force F	Surface Pressure		Clamping Screws		Extraction Screws	Approx Weight	Min. Hub Dia* mm		
	d	D	L	L_1	L_2	X	Nm	kN	Shaft Ps N/mm²	Hub Ph N/mm²	Size	Torque Nm	Size	kg	Assy Type A	Assy Type B	Assy Type C
RCK 11-25x55	25	55	46	32	40	35	784	63	291	99	M6	17	M6	0.47	76	71	66
RCK 11-28x55	28	55	46	32	40	35	882	63	259	99	M6	17	M6	0.43	76	71	66
RCK 11-30x55	30	55	46	32	40	35	931	62	243	99	M6	17	M6	0.41	76	71	66
RCK 11-35x60	35	60	60	44	54	45	1274	73	161	85	M6	17	M6	0.62	79	74	70
RCK 11-38x75	38	75	62	44	54	50	2696	142	289	113	M8	41	M8	1.1	108	100	93
RCK 11-40x75	40	75	62	44	54	50	2843	142	276	113	M8	41	M8	1.1	108	100	93
RCK 11-42x75	42	75	62	44	54	50	2981	142	262	113	M8	41	M8	1.0	108	100	93
RCK 11-45x75	45	75	62	44	54	50	3196	142	246	113	M8	41	M8	1.0	108	100	93
RCK 11-48x80	48	80	62	44	54	50	3873	161	203	96	M8	41	M8	1.1	109	102	96
RCK 11-50x80	50	80	72	56	64	50	4069	163	196	96	M8	41	M8	1.2	109	102	96
RCK 11-55x85	55	85	72	56	64	50	5050	184	201	101	M8	41	M8	1.3	118	110	103
RCK 11-60x90	60	90	72	56	64	50	6080	203	198	103	M8	41	M8	1.4	126	117	109
RCK 11-65x95	65	95	72	56	64	50	6619	204	183	98	M8	41	M8	1.5	130	122	114
RCK 11-70x110	70	110	88	70	78	60	11277	322	218	111	M10	83	M10	2.8	158	146	136
RCK 11-75x115	75	115	88	70	78	60	12062	322	218	111	M10	83	M10	3.0	165	153	142
RCK 11-80x120	80	120	88	70	78	60	14219	355	210	112	M10	83	M10	3.2	173	160	149
RCK 11-85x125	85	125	88	70	78	60	15102	355	210	112	M10	83	M10	3.3	180	167	155
RCK 11-90x130	90	130	88	70	78	60	17455	388	203	112	M10	83	M10	3.5	187	173	161
RCK 11-95x135	95	135	88	70	78	60	18338	386	203	112	M10	83	M10	3.7	195	180	167
RCK 11-100x145	100	145	112	90	100	80	25791	516	196	104	M12	145	M12	5.6	203	189	177
RCK 11-110x155	110	155	112	90	100	80	31184	567	194	107	M12	145	M12	6.1	219	204	190
RCK 11-120x165	120	165	112	90	100	80	39618	660	207	117	M12	145	M12	6.6	242	223	206
RCK 11-130x180	130	180	130	104	116	90	50503	777	188	109	M14	230	M14	9.3	257	238	221
RCK 11-140x190	140	190	130	104	116	90	63470	907	204	121	M14	230	M14	9.9	283	260	239
RCK 11-150x200	150	200	130	104	116	90	72790	971	204	124	M14	230	M14	10.6	301	276	253
RCK 11-160x210	160	210	130	104	116	90	82890	1036	204	125	M14	230	M14	11.2	317	290	267
RCK 11-170x225	170	225	164	134	148	110	106000	1247	178	110	M16	355	M16	16.8	322	298	277
RCK 11-180x235	180	235	164	134	148	110	120900	1343	180	112	M16	355	M16	17.7	339	313	291
RCK 11-190x250	190	250	164	134	148	110	131250	1382	182	113	M16	355	M16	20.6	362	334	310
RCK 11-200x260	200	260	164	134	148	110	143200	1432	173	110	M16	355	M16	21.6	372	345	321
RCK 11-220x285	220	285	164	134	148	110	177500	1614	184	112	M16	355	M16	25.8	411	380	353
RCK 11-240x305	240	305	164	134	148	110	210000	1750	175	110	M16	355	M16	27.9	436	404	376
RCK 11-260x325	260	325	164	134	148	110	228000	1754	172	110	M16	355	M16	30.1	465	431	401
RCK 11-280x355	280	355	197	165	177	130	310000	2214	166	105	M20	690	M20	45.3	499	464	433
RCK 11-300x375	300	375	197	165	177	130	375000	2500	172	110	M20	690	M20	48.3	537	497	462
RCK 11-320x405	320	405	197	165	177	130	420000	2625	166	105	M20	690	M20	59.0	569	530	494
RCK 11-340x425	340	425	197	165	177	130	465000	2735	163	104	M20	690	M20	62.4	595	555	518
RCK 11-360x455	360	455	224	190	202	150	585000	3267	158	100	M22	930	M22	85.1	629	587	550
RCK 11-380x475	380	475	224	190	202	150	650000	3421	158	101	M22	930	M22	89.5	659	615	575
RCK 11-400x495	400	495	224	190	202	150	720000	3600	162	105	M22	930	M22	93.9	696	648	604
RCK 11-420x515	420	515	224	190	202	150	750000	3571	155	101	M22	930	M22	98.3	714	667	624
RCK 11-440x535	440	535	224	190	202	150	790000	3591	146	96	M22	930	M22	103	729	683	642
RCK 11-460x555	460	555	224	190	202	150	830000	3609	142	94	M22	930	M22	107	751	705	663
RCK 11-480x575	480	575	224	190	202	150	1000000	4167	159	106	M22	930	M22	112	811	754	703
RCK 11-500x595	500	595	224	190	202	150	1050000	4200	152	102	M22	930	M22	116	828	772	722
RCK 11-520x615	520	615	224	190	202	150	1170000	4500	157	106	M22	930	M22	121	868	807	752
RCK 11-540x635	540	635	224	190	202	150	1200000	4444	151	103	M22	930	M22	125	887	826	772
RCK 11-560x655	560	655	224	190	202	150	1300000	4643	155	106	M22	930	M22	129	924	859	801
RCK 11-580x675	580	675	224	190	202	150	1390000	4793	150	103	M22	930	M22	134	942	878	821
RCK 11-600x695	600	695	224	190	202	150	1480000	4933	149	103	M22	930	M22	138	970	904	845
RCK 12-320x455	320	455	307	260	280	220	776000	4850	199	112	M27	1750	M27	159	656	607	563
RCK 12-340x475	340	475	307	260	280	220	920000	5412	209	120	M27	1750	M27	168	704	647	597
RCK 12-360x495	360	495	307	260	280	220	1070000	5944	217	126	M27	1750	M27	177	751	686	630
RCK 12-380x515	380	515	307	260	280	220	1130000	5947	206	121	M27	1750	M27	185	768	704	649
RCK 12-400x535	400	535	307	260	280	220	1190000	5950	195	117	M27	1750	M27	194	784	723	668
RCK 12-420x555	420	555	307	260	280	220	1360000	6476	202	123	M27	1750	M27	203	831	762	701
RCK 12-440x575	440	575	307	260	280	220	1430000	6500	194	119	M27	1750	M27	212	849	781	721
RCK 12-460x595	460	595	307	260	280	220	1490000	6478	185	114	M27	1750	M27	220	865	798	740
RCK 12-480x615	480	615	307	260	280	220	1820000	7583	207	130	M27	1750	M27	229	945	861	788
RCK 12-500x635	500	635	307	260	280	220	1890000	7560	199	125	M27	1750	M27	238	959	878	806
RCK 12-520x655	520	655	307	260	280	220	1970000	7577	191	122	M27	1750	M27	247	977	896	826
RCK 12-540x675	540	675	307	260	280	220	2190000	8111	197	126	M27	1750	M27	255	1024	936	859
RCK 12-560x695	560	695	307	260	280	220	2270000	8107	190	123	M27	1750	M27	264	1040	954	878

*Minimum outside diameter of hubs manufactured in medium carbon steels with yield strength ≥ 320 N/mm².
For hub types, and other materials, refer to page 3.
For assembly and disassembly instructions refer to page 24.

Tel: +44 121 360 0155 Fax: +44 121 325 1079 Email: sales@crossmorse.com

Clamping Elements Type RCK 45

These clamping elements provide good torque transmission from a compact, low cost assembly. These units must always be installed inside the hub, and will then provide a reasonable level of concentricity. A small axial movement of the hub occurs during clamping.

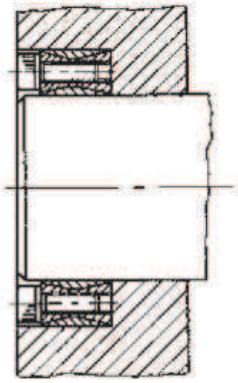

Recommended tolerances for full torque transmission are:-

Shaft	h8
Hub	H8

Clamping surfaces to be finished to Rz ≤ 15 μm.

X = Distance required to remove screws, additional clearance for alan key may be required.

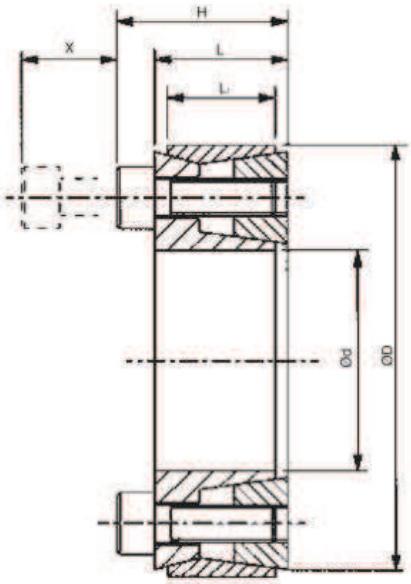

Dimensions

Part No. †	Dimensions mm						Torque Cap. M Nm	Axial Force F kN	Surface Pressure		Clamping Screws		Extraction Screws	Approx Weight	Min. Hub Dia* mm		
	d	D	L	L_1	H	X			Shaft Ps N/mm²	Hub Ph N/mm²	Size	Torque Nm	Size	kg	Assy Type A	Assy Type B	Assy Type C
RCK45-16x32	16	32	17	11	22	12	80	10	260	120	M4	5	M4	0.15	47	44	40
RCK45-18x40	18	40	18	12	24	15	180	20	260	120	M6	16	M6	0.18	59	55	50
RCK45-19x41	19	41	18.5	12	24.5	15	210	22	260	120	M6	16	M8	0.20	61	56	52
RCK45-20x42	20	42	18.5	12	24.5	15	240	24	250	120	M6	16	M8	0.20	62	57	53
RCK45-24x46	24	46	18.5	12	24.5	15	290	24	250	120	M6	16	M8	0.23	68	63	58
RCK45-25x47	25	47	18.5	12	24.5	15	330	26	230	120	M6	16	M8	0.24	70	64	59
RCK45-28x50	28	50	18.5	12	24.5	15	370	26	220	120	M6	16	M8	0.24	74	68	63
RCK45-30x52	30	52	18.5	12	24.5	15	430	29	210	120	M6	16	M8	0.27	77	71	65
RCK45-35x57	35	57	22	15	28	15	610	35	170	100	M6	16	M8	0.28	79	74	69
RCK45-38x60	38	60	22	15	28	15	680	36	170	100	M6	16	M8	0.30	83	77	73
RCK45-40x62	40	62	22	15	28	15	780	39	170	100	M6	16	M8	0.31	86	80	75
RCK45-42x70	42	70	28	18	36	22	1480	70	190	110	M8	41	M10	0.50	100	93	86
RCK45-45x73	45	73	28	18	36	22	1500	67	210	130	M8	41	M10	0.53	112	102	94
RCK45-48x76	48	76	28	18	36	22	1550	65	210	130	M8	41	M10	0.59	117	106	97
RCK45-50x78	50	78	28	18	36	22	1650	66	190	120	M8	41	M10	0.62	116	106	98
RCK45-55x83	55	83	28	18	36	22	2000	73	190	120	M8	41	M10	0.64	123	113	104
RCK45-60x88	60	88	28	18	36	22	2350	78	190	120	M8	41	M10	0.69	131	120	111
RCK45-65x93	65	93	28	18	36	22	2400	74	157	110	M8	41	M10	0.74	133	123	115
RCK45-70x105	70	105	35	22	45	25	3900	111	180	120	M10	70	M12	1.25	156	143	132
RCK45-75x110	75	110	35	22	45	25	4400	117	176	120	M10	70	M12	1.32	163	150	138
RCK45-80x115	80	115	35	22	45	25	4800	120	170	120	M10	70	M12	1.40	171	157	145
RCK45-85x120	85	120	35	22	45	25	5500	129	176	125	M10	70	M12	1.48	181	166	152
RCK45-90x125	90	125	35	22	45	25	5800	129	167	120	M10	70	M12	1.57	185	170	157
RCK45-100x138	100	138	35	22	45	25	6500	130	152	110	M10	70	M12	1.67	197	183	170

*Minimum outside diameter of hubs manufactured in medium carbon steels with yield strength ≥ 320 N/mm².
For hub types, and other materials, refer to page 3.
For assembly and disassembly instructions refer to page 24.

Tel: +44 121 360 0155 Fax: +44 121 325 1079 Email: sales@crossmorse.com

Clamping Elements Type RCK 61

Available for shaft diameters from 10mm, these clamping elements are designed for small low torque applications, providing concentric connection of components to shafting. The thin wall design combined with low hub pressures enable use within small hub diameters. The design is intended that the units fit totally within the hub bore to provide safe surface. Some axial movement will occur when the units are clamped.

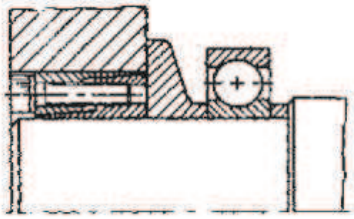

Recommended tolerances for full torque transmission are:-

Shaft h8
Hub H8

Clamping surfaces to be finished to Rz ≤ 15 μm.

X = Distance required to remove screws, additional clearance for alan key may be required.

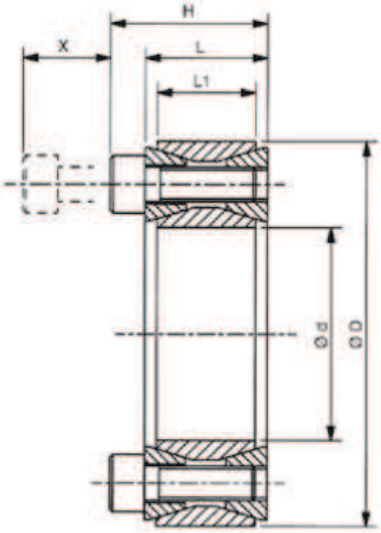

Dimensions

Part No.	Dimensions mm					Torque Cap. M Nm	Axial Force F kN	Surface Pressure		Clamping Screws		Approx Weight	Min. Hub Dia* mm		
	d	D	L	L_1	X			Shaft Ps N/mm²	Hub Ph N/mm²	Size	Torque Nm	kg	Assy Type A	Assy Type B	Assy Type C
RCK61-5x16	5	16	13.5	11	10	5	2.0	176	55	M2.5	1.2	0.05	19	18	18
RCK61-6x16	6	16	13.5	11	10	6	2.0	147	55	M2.5	1.2	0.05	19	18	18
RCK61-7x17	7	17	13.5	11	10	8	2.3	134	55	M2.5	1.2	0.06	20	20	19
RCK61-8x18	8	18	13.5	11	10	10	2.5	113	50	M2.5	1.2	0.07	21	20	20
RCK61-9x20	9	20	15.5	13	12	15	3.3	122	55	M2.5	1.2	0.09	24	23	22
RCK61-10x20	10	20	15.5	13	12	19	3.8	90	45	M2.5	1.2	0.08	23	22	22
RCK61-11x22	11	22	15.5	13	12	21	3.8	82	41	M2.5	1.2	0.09	25	24	24
RCK61-12x22	12	22	15.5	13	12	23	3.8	75	41	M2.5	1.2	0.09	25	24	24
RCK61-14x26	14	26	20	17	16	39	5.6	71	38	M3	2.1	0.12	29	29	28
RCK61-15x28	15	28	20	17	16	42	5.6	67	36	M3	2.1	0.13	31	31	30
RCK61-16x32	16	32	21	17	16	77	9.6	108	54	M4	4.9	0.15	38	37	35
RCK61-17x35	17	35	25	21	20	82	9.6	82	40	M4	4.9	0.21	40	39	38
RCK61-18x35	18	35	25	21	20	87	10	78	40	M4	4.9	0.20	40	39	38
RCK61-19x35	19	35	25	21	20	91	10	74	40	M4	4.9	0.19	40	39	38
RCK61-20x38	20	38	26	21	20	157	16	114	60	M5	9.7	0.21	46	44	43
RCK61-22x40	22	40	26	21	20	173	16	104	57	M5	9.7	0.22	48	46	45
RCK61-24x47	24	47	32	26	24	268	22	110	56	M6	17	0.31	56	54	52
RCK61-25x47	25	47	32	26	24	279	22	105	56	M6	17	0.30	56	54	52
RCK61-28x50	28	50	32	26	24	468	33	141	79	M6	17	0.33	64	61	58
RCK61-30x55	30	55	32	26	24	502	33	132	72	M6	17	0.40	69	66	63
RCK61-32x55	32	55	32	26	24	535	33	124	72	M6	17	0.38	69	66	63
RCK61-35x60	35	60	37	31	28	781	45	125	73	M6	17	0.54	76	72	69
RCK61-38x65	38	65	37	31	28	848	45	115	67	M6	17	0.63	80	77	74
RCK61-40x65	40	65	37	31	28	892	45	109	67	M6	17	0.59	80	77	74
RCK61-42x75	42	75	44	36	34	1272	61	121	68	M8	41	1.00	93	89	85
RCK61-45x75	45	75	44	36	34	1363	61	113	68	M8	41	0.95	93	89	85
RCK61-48x80	48	80	44	36	34	1938	81	142	85	M8	41	1.07	105	99	94
RCK61-50x80	50	80	44	36	34	2019	81	136	85	M8	41	1.02	105	99	94

*Minimum outside diameter of hubs manufactured in medium carbon steels with yield strength ≥ 320 N/mm².
For hub types, and other materials, refer to page 3.
For assembly and disassembly instructions refer to page 24.

Tel: +44 121 360 0155 Fax: +44 121 325 1079 Email: sales@crossmorse.com

Clamping Elements Type RCK 50

These shaft clamping elements consist of just two conical rings which require the minimum of radial space, so providing compact assemblies, and enabling use within small hub diameters. The design offers the maximum versatility of design, but does require the customer to provide their own thrust ring assembly. Whilst only providing low torque transmission per unit they can be combined (up to 4 units) to increase torque capacity. When fully clamped these units provide excellent gastight sealing. Many designs of thrust rings are possible and sketches to the left are two typical designs. These units do not self centre, so require external means of centring the hub.

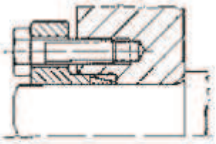

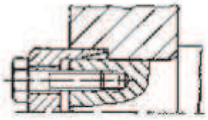

Recommended tolerances for full torque transmission are:-

Up to 38m shaft Ø:-	Shaft	h6
	Hub	H7
40mm and above shaft Ø:-	Shaft	h8
	Hub	H8

Clamping surfaces to be finished to Rz ≤ 15 μm.

Factor for combining elements in one assembly.

Number of Elements	Torque Capacity
2	1.55M Nm
3	1.86M Nm
4	2.03M Nm

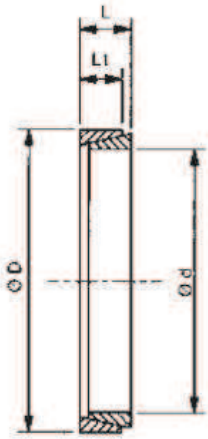

Dimensions

Part No. †	Dimensions mm				Torque Cap. M Nm	Axial Force F kN	Surface Pressure		Axial Force necessary to clamp kN	Approx. Weight gms	Min. Hub Dia* mm		
	d	D	L	L_1			Shaft Ps N/mm²	Hub Ph N/mm²			Assy Type A	Assy Type B	Assy Type C
RCK50-6x9	6	9	4.5	3.7	2.4	0.8	115	75	3.8	1.2	11.5	10.9	10.4
RCK50-7x10	7	10	4.5	3.7	3.0	0.9	105	70	3.9	1.4	12.5	12.0	11.5
RCK50-8x11	8	11	4.5	3.7	4.7	1.2	120	90	5.3	1.5	14.7	13.9	13.1
RCK50-9x12	9	12	4.5	3.7	7.9	1.8	140	105	15.6	1.7	16.9	15.8	14.7
RCK50-10x13	10	13	4.5	3.7	9.5	1.9	135	105	15.6	1.8	18.3	17.1	15.9
RCK50-12x15	12	15	4.5	3.7	11.4	1.9	115	90	15.6	2.2	20.1	18.9	17.8
RCK50-13x16	13	16	4.5	3.7	13.1	2.0	110	90	15.6	2.3	21.4	20.2	19.0
RCK50-14x18	14	18	6.3	5.3	22.3	3.2	115	90	25.4	4.9	24.1	22.7	21.4
RCK50-15x19	15	19	6.3	5.3	24.3	3.2	110	85	25.4	5.3	25.0	23.6	22.4
RCK50-16x20	16	20	6.3	5.3	27.3	3.4	105	85	25.4	5.5	26.3	24.9	23.5
RCK50-17x21	17	21	6.3	5.3	29.8	3.5	105	85	25.4	5.8	27.6	26.1	24.7
RCK50-18x22	18	22	6.3	5.3	32.4	3.6	100	80	25.4	6.1	28.5	27.1	25.6
RCK50-19x24	19	24	6.3	5.3	49.0	5.2	140	110	36.0	7.8	34.4	31.9	29.6
RCK50-20x25	20	25	6.3	5.3	53.0	5.3	135	105	36.0	8.2	35.2	32.8	30.6
RCK50-22x26	22	26	6.3	5.3	66.0	6.0	135	115	36.0	7.3	37.9	35.0	32.4
RCK50-24x28	24	28	6.3	5.3	73.0	6.1	130	110	36.0	8.0	40.1	37.2	34.6
RCK50-25x30	25	30	6.3	5.3	72.0	5.8	115	95	36.0	10.1	40.8	38.3	36.0
RCK50-28x32	28	32	6.3	5.3	86.0	6.1	115	100	36.0	9.2	44.3	41.4	38.7
RCK50-30x35	30	35	6.3	5.3	91.0	6.1	100	85	36.0	12.0	46.0	43.5	41.2
RCK50-32x36	32	36	6.3	5.3	131.0	8.2	130	115	45.0	10.0	52.5	48.4	44.9
RCK50-35x40	35	40	7	6.0	171.0	9.8	125	110	54.0	17.0	57.3	53.1	49.4
RCK50-36x42	36	42	7	6.0	169.0	9.4	115	100	54.0	20.0	58.1	54.3	50.8
RCK50-38x44	38	44	7	6.0	181.0	9.5	110	95	54.0	21.0	59.8	56.1	52.7
RCK50-40x45	40	45	8	6.6	231.0	11.6	115	105	66.0	23.0	63.3	58.9	55.0
RCK50-42x48	42	48	8	6.6	235.0	11.2	110	95	66.0	28.0	65.2	61.2	57.5
RCK50-45x52	45	52	10	8.6	390.0	19.0	116	105	110.0	42.0	73.2	68.1	63.5
RCK50-48x55	48	55	10	8.6	572.0	23.8	155	135	132.0	45.0	86.3	78.2	71.3
RCK50-50x57	50	57	10	8.6	602.0	24.1	150	130	132.0	47.0	87.8	79.9	73.1
RCK50-55x62	55	62	10	8.6	670.0	24.4	140	125	132.0	50.0	93.7	85.7	78.8
RCK50-56x24	56	64	12	10.4	790.0	28.2	130	115	158.0	67.0	93.3	86.1	79.7
RCK50-60x68	60	68	12	10.4	860.0	28.7	125	110	158.0	72.0	97.4	90.2	83.9
RCK50-63x71	63	71	12	10.4	945.0	30.0	125	110	160.0	76.0	101.6	94.2	87.6
RCK50-65x73	65	73	12	10.4	1000	30.8	125	110	160	78	104.5	96.9	90.0
RCK50-70x79	70	79	14	12.2	1300	37.1	125	110	200	110	113.1	104.8	97.4
RCK50-71x80	71	80	14	12.2	1340	37.7	125	110	200	114	114.5	106.1	98.7
RCK50-75x84	75	84	14	12.2	1500	40.0	125	110	220	118	120.2	111.4	103.6
RCK50-80x91	80	91	17	14.8	2100	52.5	125	110	300	187	130.3	120.7	112.2

*Minimum outside diameter of hubs manufactured in medium carbon steels with yield strength ≥ 320 N/mm².
For hub types, and other materials, refer to page 3.
For assembly and disassembly instructions refer to page 24.

† Clamping Rings for shafts up to 200mm diameter are available to order.

Tel: +44 121 360 0155 Fax: +44 121 325 1079 Email: sales@crossmorse.com

Clamping Elements Types CCE 54 and CCE 55

These clamping elements use a single lock nut to apply the clamping pressure, thereby enabling quick assembly and removal. The lock nut can be secured in postition by bending over a tab of lock washer. The thin walls of the clamping cones, combined with low hub pressures enables use with soft materials, such as aluminium, and small hub diameters.

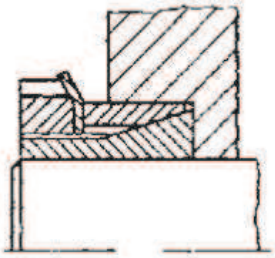

Use type CCE 54 where axial space is restricted and torque is low.

Type CCE 55 is for higher torque transmission.

Recommended tolerances for full torque transmission are:-

Shaft h8
Hub H8

Clamping surfaces to be finished to Rz ≤ 15 μm.

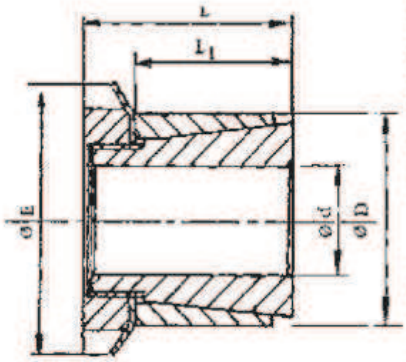

Dimensions

Part No.	Dimensions mm					Torque Cap. M Nm	Axial Force F kN	Surface Pressure		Locking Nut			Min. Hub Dia* mm		
	d	D	D_1	L	L_1			Shaft Ps N/mm²	Hub Ph N/mm²	Type	Thread	Torque Nm	Assy Type A	Assy Type B	Assy Type C
CCE54-14x25	14	25	32	16.5	6.5	52	7	241	135	KM4	M20	95	39	36	32
CCE54-15x25	15	25	32	16.5	6.5	56	7	225	135	KM4	M20	95	39	36	32
CCE54-16x25	16	25	32	16.5	6.5	60	8	211	135	KM4	M20	95	39	36	32
CCE54-17x25	17	25	38	17.5	6.5	63	7	118	80	KM5	M25	160	32	31	29
CCE54-18x30	18	30	38	17.5	6.5	91	10	257	154	KM5	M25	160	51	45	40
CCE54-19x30	19	30	38	17.5	6.5	96	10	243	154	KM5	M25	160	51	45	40
CCE54-20x30	20	30	38	17.5	6.5	102	10	231	154	KM5	M25	160	51	45	40
CCE54-24x35	24	35	45	17.5	6.5	139	12	219	150	KM6	M30	220	58	52	47
CCE54-25x35	25	35	45	17.5	6.5	144	12	210	150	KM6	M30	220	58	52	47
CCE54-28x40	28	40	52	18.5	6.5	215	15	249	174	KM7	M35	340	74	64	56
CCE54-30x40	30	40	52	20.0	8.0	230	15	188	141	KM7	M35	340	64	58	52
CCE54-32x45	32	45	58	22.0	9.0	210	13	113	80	KM8	M40	320	58	55	52
CCE54-35x45	35	45	58	22.0	9.0	331	19	199	155	KM8	M40	480	76	68	61
CCE54-40x50	40	50	65	25.0	10.0	477	24	176	141	KM9	M45	680	80	72	66
CCE54-45x55	45	55	70	26.0	10.0	617	27	180	147	KM10	M50	870	90	81	73
CCE54-48x60	48	60	75	26.0	10.0	669	28	171	137	KM11	M55	970	95	86	78
CCE54-50x60	50	60	75	26.0	10.0	697	28	164	137	KM11	M55	970	95	86	78
CCE54-55x65	55	65	80	28.0	12.0	796	29	129	109	KM12	M60	1100	93	86	80
CCE54-60x70	60	70	85	29.0	12.0	946	32	130	111	KM13	M65	1300	101	93	86
CCE54-70x84	70	84	98	29.5	13.5	1433	41	127	106	KM15	M75	2000	119	110	103
CCE55-14x25	14	25	32	29	17	90	13	143	80	KM4	M20	90	32	31	29
CCE55-15x25	15	25	32	29	17	100	13	133	80	KM4	M20	90	32	31	29
CCE55-16x25	16	25	32	29	17	80	10	94	60	KM4	M20	70	30	29	28
CCE55-17x25	17	25	38	31	18	113	13	103	70	KM5	M25	90	31	30	29
CCE55-18x30	18	30	38	33	20	100	11	75	45	KM5	M25	160	35	34	33
CCE55-19x30	19	30	38	33	20	105	11	71	45	KM5	M25	160	35	34	33
CCE55-20x30	20	30	38	33	20	112	11	68	45	KM5	M25	160	35	34	33
CCE55-24x35	24	35	45	38	25	178	15	66	45	KM6	M30	220	40	39	38
CCE55-25x35	25	35	45	38	25	185	15	63	45	KM6	M30	220	40	39	38
CCE55-28x40	28	40	52	44	30	250	18	57	40	KM7	M35	340	45	44	43
CCE55-30x40	30	40	52	44	30	270	18	53	40	KM7	M35	340	45	44	43
CCE55-32x45	32	45	58	4	28	420	26	98	70	KM8	M40	320	56	54	51
CCE55-35x45	35	45	58	45	30	390	22	58	45	KM8	M40	480	52	50	49
CCE55-40x50	40	50	65	46	30	620	31	56	45	KM9	M45	680	58	56	54
CCE55-45x55	45	55	70	47	30	580	26	61	50	KM10	M50	870	64	62	60
CCE55-50x60	50	60	75	47	30	880	35	60	50	KM11	M55	970	70	68	66
CCE55-55x65	55	65	80	48	30	1030	37	59	50	KM12	M60	1100	76	74	71
CCE55-60x70	60	70	85	50	30	1360	45	64	55	KM13	M65	1300	83	80	78

*Minimum outside diameter of hubs manufactured in medium carbon steels with yield strength ≥ 320 N/mm².
For hub types, and other materials, refer to page 3.
For assembly and disassembly instructions refer to page 24.

Tel: +44 121 360 0155 Fax: +44 121 325 1079 Email: sales@crossmorse.com

Clamping Elements Type RCK 19 & 20

Tel: +44 121 360 0155 Fax: +44 121 325 1079 Email: sales@crossmorse.com

Types RCK 19 & 20 are normally referred to as Clamping Discs, used to clamp externally onto thin walled hubs to lock them to the shaft. The design permits the use of large diameter shafts with small hub sizes, and is popular for connection of large sprocket and pulleys. The design provides for optimum concentricity, with high torque transmission. A number of shaft diameters can be accommodated by one size of unit, max., min. and an intermediate being shown in table.

Recommended tolerances

Hub Outside Ø:-	h8
*Hub Bore:-	H6
*Shaft Ø:-	j6 below 30mm h6 30mm plus

*Clearance between hub bore and shaft must not exceed figures in table.

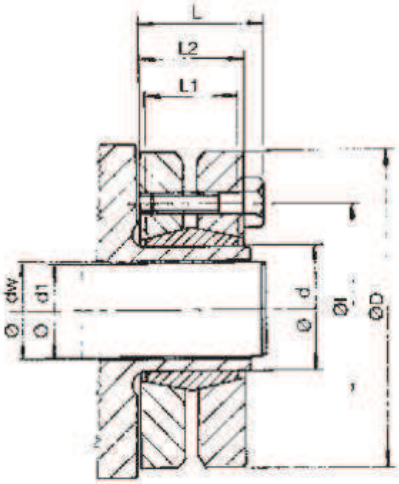

Dimensions

Part No.	Dimensions mm								Torque Cap. M Nm	Axial Force F kN	Clamping Screws		Approx Weight
	dw	Max* Clearance	d	D	L1	L2	L	X '			Size	Torque Nm	kg
	19								170	18			
RCK19-24x50	20	0.017	24	50	14	19.5	23.0	18	210	21	M5	4	0.2
	21								250	24			
	24								300	25			
RCK19-30x60	25	0.017	30	60	16	21.5	25.0	18	340	27	M5	4	0.3
	26								380	29			
	28								440	31			
RCK19-36x72	30	0.032	36	72	18	23.5	27.5	20	570	38	M6	12	0.4
	31								630	41			
	32								620	39			
RCK19-44x80	35	0.032	40	80	20	25.5	29.5	20	780	45	M6	12	0.6
	36								860	48			
	38								940	49			
RCK19-50x90	40	0.032	50	90	22	27.5	31.5	25	1160	58	M6	12	0.8
	42								1380	66			
	42								1160	55			
RCK19-55x100	45	0.032	55	100	23	30.5	34.5	25	1520	68	M6	12	1.1
	48								1880	78			
	48								1850	77			
RCK19-62x110	50	0.048	62	110	23	30.5	34.5	25	2200	88	M6	12	1.3
	52								2400	92			
	50								2000	80			
RCK19-68x115	55	0.048	68	115	23	30.5	34.5	25	2500	91	M6	12	1.4
	60								3150	105			
	55								2500	91			
RCK19-75x138	60	0.048	75	138	25	32.5	37.8	30	3200	107	M8	30	1.7
	65								3950	122			
	60								3200	107			
RCK19-80x145	65	0.048	80	145	25	32.5	37.8	30	3900	120	M8	30	1.9
	70								4600	131			
	65								4750	146			
RCK19-90x155	70	0.048	90	155	30	39.0	44.3	35	6000	171	M8	30	2.9
	75								7250	193			
	70								6900	197			
RCK19-100x170	75	0.048	100	170	34	44.0	49.3	35	7500	200	M8	30	4.0
	80								9000	225			
	75								7200	192			
RCK19-110x185	80	0.048	110	185	39	50.0	56.4	40	9000	225	M10	59	5.3
	85								10800	254			
	85								11000	259			
RCK19-125x215	90	0.069	125	215	42	54.0	60.4	40	13000	289	M10	59	7.9
	95								15000	316			
	95								15100	318			
RCK19-140x230	100	0.069	140	230	46	60.5	68.0	45	17600	352	M12	100	9.0
	105								20100	383			
	105								22000	419			
RCK19-155x265	110	0.069	155	265	50	64.5	72.0	50	25000	455	M12	100	12.0
	115								28000	487			
	115								31000	539			
RCK19-165x290	120	0.069	165	290	56	71.0	81.0	55	35000	583	M16	250	16.5
	125								39000	624			
	125								40000	640			
RCK19-175x300	130	0.079	175	300	56	71.0	81.0	55	44000	677	M16	250	17.5
	135								49000	726			
	135								55000	815			
RCK19-185x330	140	0.079	185	330	71	86.0	96.0	70	60000	857	M16	250	27.5
	145								65000	897			
	140								53300	761			
RCK19-190x330	145	0.079	190	330	71	86.0	96.0	70	58500	807	M16	250	27.1
	150								63500	847			
	150								73700	983			
RCK19-200x350	155	0.079	200	350	71	86.0	96.0	70	79800	1030	M16	250	30.7
	160								85800	1073			

' X = minimum clearance required to remove a bolt.
For assembly and disassembly instructions refer to page 24.
* Max Clearance = dw-di.

Clamping Elements Type RCK 19 & 20

CROSS+MORSE

Dimensions

Part No.	Dimensions mm								Torque Cap. M	Axial Force F	Clamping Screws		Approx Weight
	dw	Max* Clearance	d	D	L_1	L_2	L	X [1]	Nm	kN	Size	Torque Nm	kg
	160								95000	1188			
RCK19-220x370	165	0.079	220	370	88	104	114	85	102000	1236	M16	250	40.8
	170								110000	1294			
	170								120000	1412			
RCK19-240x405	180	0.090	240	405	92	109	121	90	140000	1556	M20	490	51.3
	190								160000	1684			
	190								165000	1737			
RCK19-260x430	200	0.090	260	430	103	120	132	100	185000	1850	M20	490	63.3
	210								204000	1943			
	210								216000	2057			
RCK19-280x460	220	0.090	280	460	114	134	147	112	245000	2227	M20	490	79.6
	230								270000	2348			
	230								274000	2383			
RCK19-300x485	240	0.090	300	485	122	142	155	120	296000	2467	M20	490	92.8
	245								316000	2580			
	250								352000	2816			
RCK19-330x520	260	0.101	330	520	122	142	155	120	385000	2962	M20	490	103
	270								420000	3111			
	270								443000	3281			
RCK19-350x580	280	0.101	350	580	140	162	175	140	480000	3429	M20	490	157
	285								500000	3509			
	290								570000	3931			
RCK19-380x645	300	0.101	380	645	144	168	183	140	610000	4067	M24	840	205
	310								660000	4258			
	315								671000	4260			
RCK19-400x680	320	0.111	400	680	144	168	183	140	695000	4344	M24	840	228
	330								745000	4515			
	330								782000	4739			
RCK19-420x690	340	0.111	420	690	164	188	203	160	841000	4947	M24	840	258
	350								902000	5154			
	340								805000	4735			
RCK19-440x750	350	0.111	440	750	177	202	217	175	861000	4920	M24	840	342
	360								920000	5111			
	360								1000000	5556			
RCK19-460x800	370	0.111	460	800	177	202	217	175	1073000	5800	M24	840	397
	380								1141000	6005			
	380								1175000	6184			
RCK19-480x800	390	0.111	480	800	188	213	228	185	1250000	6410	M24	840	404
	400								1312000	6560			
	400								1314000	6570			
RCK19-500x850	410	0.123	500	850	188	213	230	185	1382000	6741	M27	1250	466
	420								1460000	6952			
	135								73000	1081			
RCK20-185x330	140	0.079	185	330	92	112	122	90	79000	1129	M16	250	36.0
	145								87000	1200			
	150								93000	1240			
RCK20-200x350	155	0.079	200	350	92	112	122	90	105000	1355	M16	250	39.8
	160								115000	1438			
	160								128000	1600			
RCK20-220x370	165	0.079	220	370	114	134	144	110	137000	1661	M16	250	52.9
	170								147000	1729			
	170								157000	1847			
RCK20-240x405	180	0.090	240	405	120	144	157	120	178000	1978	M20	490	66.9
	190								199000	2095			
	190								215000	2263			
RCK20-260x430	200	0.090	260	430	136	160	173	135	242000	2420	M20	490	83.6
	210								269000	2562			
	210								286000	2724			
RCK20-280x460	220	0.090	280	460	148	172	185	145	322000	2927	M20	490	103
	230								356000	3096			
	230								342000	2974			
RCK20-300x485	240	0.090	300	485	152	176	189	150	377000	3142	M20	490	116
	250								402000	3216			
	250								490000	3920			
RCK20-340x570	260	0.101	340	570	176	200	215	175	531000	4085	M24	840	193
	270								579000	4289			
	270								557000	4126			
RCK20-350x580	280	0.101	350	580	176	200	215	175	605000	4321	M24	840	197
	290								630000	4345			
	290								619000	4269			
RCK20-380x645	300	0.101	380	645	180	204	219	180	669000	4460	M24	840	256
	310								720000	4645			
	310								752000	4852			
RCK20-400x680	320	0.111	400	680	188	212	227	185	789000	4931	M24	840	298
	330								846000	5127			
	330								1000000	6061			
RCK20-420x690	340	0.111	420	690	214	238	253	210	1070000	6294	M24	840	336
	350								1142000	6526			
	340								1059000	6229			
RCK20-440x750	350	0.111	440	750	224	252	269	220	1132000	6469	M27	1250	433
	360								1205000	6694			
	360								1321000	7339			
RCK20-460x770	370	0.111	460	770	224	252	269	220	1422000	7686	M27	1250	448
	380								1502000	7905			
	380								1540000	8105			
RCK20-480x800	390	0.111	480	800	246	274	291	240	1630000	8359	M27	1250	528
	400								1724000	8620			
	400								1752000	8760			
RCK20-500x850	410	0.123	500	850	246	274	291	240	1842000	8985	M27	1250	609
	420								1943000	9252			

[1] X = minimum clearance required to remove a bolt.
For assembly and disassembly instructions refer to page 24.
* Max Clearance = dw-di.

Tel: +44 121 360 0155 Fax: +44 121 325 1079 Email: sales@crossmorse.com

Clamping Elements Type RCK 25

No need for a Torque Wrench with these Clamping elements, just tighten the screws in clockwise sequence in stages until the front faces of the flange and outer ring are aligned. This allows the transmission of torque values shown in the table. This overcomes the problems often encountered where units are either under or over tightened causing failures in transmission. There can also be a time saving in that powered tools can be used for the belt tightening.

Increased torque capacities are achieved by the use of larger screws. The single block design automatically provides parallel setting of the parts, thereby reducing the need for dynamic balancing.

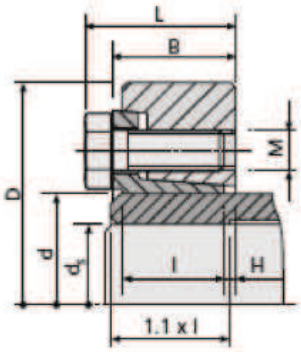

Recommended tolerances

Hub Outside	d	f7
Hub Bore	ds	H7
Shaft Diameter	≤ 160mm	h6
Shaft Diameter	≥ 160mm	g6

Clamping Surfaces to be finished to Rz 3.2μm or better

Dimensions

Part No.	Dimensions mm							Torque Cap. M Nm	Axial Force F kN	Clamping Screws		Approx Weight
	ds	d	D	l	B	L	H			Size M	Torque Nm	kg
RCK25-68x115	50 55 60	68	115	24.5	29.5	35.0	3.5	2400 3200 4000	96 116 133	M8	34	1.4
RCK25-80x141	60 65 70	80	141	25	31.0	38.0	4	4300 5400 6500	143 166 186	M10	70	2.2
RCK25-95x170	70 75 80	95	170	36.5	43.5	50.5	4.5	7500 9000 10600	214 240 265	M10	70	4.8
RCK25-110x185	80 85 90	110	185	40.5	49	57	5	12800 14800 17000	320 348 378	M12	120	6.0
RCK25-125x215	90 95 100	125	215	45	53.5	61.5	5.5	16600 19000 21500	369 400 430	M12	120	9.1
RCK25-140x230	100 105 115	140	230	47	58	67	7	23500 26000 32500	470 495 565	M14	190	10.5
RCK25-150x263	110 120 125	150	263	51	63	72	7.5	31500 35000 43000	573 583 688	M14	190	16.0
RCK25-160x290	120 130 135	160	290	56	68	79	7.5	45000 49000 59000	750 754 874	M16	290	21.8
RCK25-170x300	130 140 145	170	300	56	69	80	8	55000 60000 71000	846 857 979	M16	290	23.0
RCK25-185x320	140 150 155	185	320	71.5	85.5	96.5	8	81000 88000 101000	1157 1173 1303	M16	290	32.6
RCK25-200x340	150 160 165	200	340	71.5	85.5	96.5	8	97000 104000 120000	1293 1300 1455	M16	290	36.1
RCK25-220x370	160 170 180	220	370	88	105	118	11	130000 150000 170000	1625 1765 1889	M20	570	51.3
RCK25-240x405	170 180 200	240	405	92	109	122	11	152000 174000 219000	1788 1933 2190	M20	570	64.3
RCK25-260x430	190 200 220	260	430	103	120	133	11	215000 240000 300000	2263 2400 2727	M20	570	78.8
RCK25-300x485	220 230 250	300	485	122	140	155	16	365000 403000 487000	3318 3504 3896	M24	990	111
RCK25-340x570	250 260 280	340	570	137	159	174	18	536000 586000 693000	4288 4508 4950	M24	990	182
RCK25-360x590	270 280 290	360	590	140	163	178	20	687000 744000 830000	5089 5314 5724	M24	990	193
RCK25-390x650	290 300 320	390	650	144	167	184	20	859000 962000 1068000	5924 6413 6675	M27	1480	245
RCK25-420x670	320 330 350	420	670	165	186	203	20	1065000 1141000 1301000	6656 6915 7434	M27	1480	279
RCK25-440x740	340 350 370	440	740	172	194	211	20	1333000 1421000 1606000	7841 8120 8681	M27	1480	380
RCK25-460x770	360 370 390	460	770	172	195	212	20	1532000 1626000 1826000	8511 8789 9364	M27	1480	411
RCK25-480x800	380 390 410	480	800	188	214	233	22	1822000 1929000 2151000	9589 9892 10493	M30	1980	485
RCK25-500x850	400 410 430	500	850	190	215	234	22	2075000 2191000 2432000	10375 10688 11312	M30	1980	562
RCK25-530x850	430 440 460	530	850	198	230	249	22	2100000 2200000 2430000	9767 10000 10565	M30	1980	566
RCK25-560x940	450 460 480	560	940	213	242	261	22	2799000 2938000 3223000	12440 12774 13429	M30	1980	773
RCK25-590x960	470 480 500	590	960	228	260	279	28	3265000 3418000 3736000	13894 14242 14944	M30	1980	820

Tel: +44 121 360 0155 Fax: +44 121 325 1079 Email: sales@crossmorse.com

Clamping Elements Type RCK 95

Similar in design to the Clamping Discs, type RCK 19, but with the discs spaced further apart to enable connection to more than one shaft, enabling use as a rigid shaft coupling. These units can be used to connect two identical diameter shafts which are perfectly aligned, or to produce a longer shaft which is only mounted in two bearings. Torque capacities are suitable for standard shafting. These units provide zero backlash shaft connection with advantage of fast assembly and disassembly. The design makes the unit equally suitable for horizontal and vertical shafts, capable of withstanding high axial loads.

Recommended tolerances for full torque transmission shafts should be to h8 tolerance with surface finish Rz ≤ 15 μm.

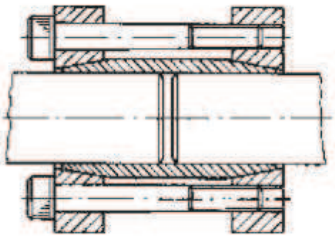

Warning

The units are not flexible couplings, and must never be used as such. Any radial loads on shafts must be adequately supported by bearing assemblies.

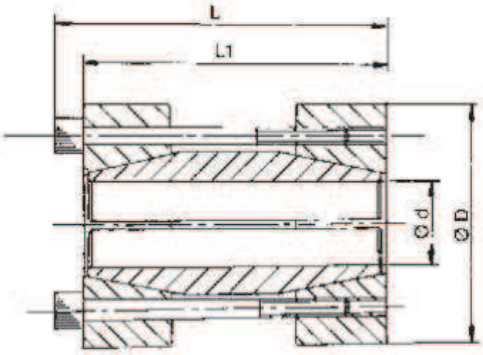

Dimensions

Part No.	Dimensions mm				Torque Cap. M Nm	Axial Force F kN	Shaft Surface Pressure Ps N/mm²	Clamping Screws		Approx Weight
	d	D	L	L1				Size	Torque Nm	gms
RCK95-17x50	17	50	56	50	200	21	110	M6	17	0.46
RCK95-18x50	18	50	56	50	220	22	110	M6	17	0.45
RCK95-19x50	19	50	56	50	230	22	110	M6	17	0.44
RCK95-20x50	20	50	56	50	240	22	105	M6	17	0.44
RCK95-24x55	24	55	66	60	290	22	120	M6	17	0.63
RCK95-25x55	25	55	66	60	450	32	110	M6	17	0.65
RCK95-28x60	28	60	66	60	510	33	110	M6	17	0.75
RCK95-30x60	30	60	66	60	550	33	105	M6	17	0.71
RCK95-32x63	32	63	66	60	580	33	90	M6	17	0.73
RCK95-35x75	35	75	83	75	760	39	105	M8	41	1.33
RCK95-38x75	38	75	83	75	850	40	100	M8	41	1.20
RCK95-40x75	40	75	83	75	900	41	95	M8	41	1.19
RCK95-42x78	42	78	83	75	930	40	90	M8	41	1.28
RCK95-45x85	45	85	93	85	1520	61	110	M8	41	1.72
RCK95-48x90	48	90	93	85	1600	60	100	M8	41	1.90
RCK95-50x90	50	90	93	85	1690	61	95	M8	41	1.88
RCK95-55x94	55	94	93	85	2430	80	110	M8	41	2.00
RCK95-60x100	60	100	93	85	2680	80	95	M8	41	2.17
RCK95-65x105	65	105	93	85	2900	80	90	M8	41	3.95
RCK95-70x115	70	115	110	100	3720	96	90	M10	83	5.25
RCK95-75x125	75	125	110	100	3970	95	80	M10	83	5.46
RCK95-80x125	80	125	110	100	4280	96	70	M10	83	5.30
RCK95-90x135	90	135	110	100	5400	108	70	M10	83	5.60
RCK95-100x155	100	155	132	120	8700	157	100	M12	143	7.00

For assembly and disassembly instructions refer to page 24.

Tel: +44 121 360 0155 Fax: +44 121 325 1079 Email: sales@crossmorse.com

Installation Instructions

Installation and Removal of Cross Shaft Clamping Elements

Types RCK 10, 11, 12, 13, 15, 16, 61, 70, 71, 80 and ACE81

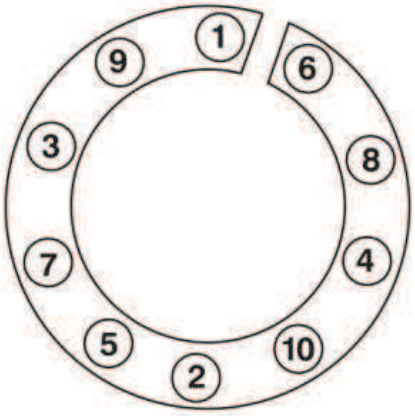

Installation:-

1. Slacken all screws in element by approx. two turns.
2. Remove two or three screws completely, and fit into equally spaced sempty release thread holes. Tighten these screws lightly so as to ensure inner and outer cones are kept apart.
3. Clean all contact surfaces including screw threads, and lightly oil with clean thin unmodified oil.*
4. Insert clamping element into hub and push onto shaft and locate.
5. Remove screws from release holes and replace in original holes.
6. Tighten all screws finger tight and align hub.
7. Tighten all screws evenly in a diametrically opposite sequence (see typical progression in sketch) using a torque wrench, initially at half screw catalogue torque, then 3/4 value, and finally full torque. Check all screws at full torque until no further rotation of screws occurs.

Disassembly:-

1. Slacken all clamping screws by couple of turns, completely removing as many as release holes in element.
2. Fit screws in release holes and tighten in sequence as clamping to force inner and outer cones apart.
3. Carefully remove hub and clamping element from shaft, and take element from hub.

Types RCK 40 and 45

Installation:-

1. Clean all contact surfaces, and lightly oil with clean thin unmodified mineral oil.*
2. Fit hub to shaft and insert clamping element.
3. Tighten all screws finger tight and align hub.
4. Tighten all screws evenly in a diametrically opposite sequence (see typical progression in sketch) using a torque wrench, initially at half catalogue torque for screw, then at 3/4 value, and finally at full torque. Check all screws are at full torque until no further rotation of screws can be achieved.

Disassembly:-

1. Release clamping screws in same sequence as for clamping. Element should now self release. If required lightly tap clamping screws to aid release. If still not released remove light coloured screws completely and replace with next larger metric size and tighten these screws to jack the cones apart.

Type RCK 50

Installation procedure depends detailed design, but following is typical:-

1. Clean all contact surfaces, and lightly oil with clean thin unmodified mineral oil.*
2. Push hub onto shaft and insert spacer sleeves and clamping ring sets according to application drawing.
3. Insert distance ring if fitted and attach clamping flange lightly tightening screws. Align hub.
4. Tighten all screws in a diametrically opposite sequence, in several stages up to max. torque for screw size.

Disassembly:-

The taper of the individual rings is such that the assembly should automatically release when the locking screws are slackened. If not light tapping on the hub circumference should release them.

Types CCE 54 and 55

Installation:-

1. Clean all contact surfaces, and lightly oil with clean unmodified mineral oil.*
2. Turn locking nut anticlockwise until outer sleeve loose on inner cone.
3. Position hub on shaft and insert clamping element.
4. Align hub and tighten locking nut to catalogue torque value, and bend suitable tab on lock washer to prevent further rotation.

Disassembly:-

1. Release bent washertab and undo nut until sleeve loose.
2. Remove clamping element, If tight give end of tab gentle tap to release.

Types RCK 19/20 and 95

Installation:-

1. Clean all contact surfaces, and lightly oil with clean thin unmodified mineral oil.*
2. Slacken all clamping bolts by a couple of turns.
3. (RCK 19/20 only) Fit clamping element on outer diameter of hub, and slide assembly onto shaft and position. (RCK 95 only) Fit shaft ends equally into clamping element ensuring small clearance between shafts.
4. Tighten all bolts in a diametrically opposite sequence, in several stages up to max. specified torque.

Disassembly:-

Slacken all bolts and gently tap on bolts to release clamping element.

*WARNING: Never use, lubricant containing Molydenum or E.P. additives, synthetic lubricant, or grease.

Tel: +44 121 360 0155 Fax: +44 121 325 1079 Email: sales@crossmorse.com

Formulae and Conversion Factors

Useful formulae in Power Transmission Calculations

1. Motor Power (kw) $P = \frac{T \times n}{9550}$

2. Torque (Nm) $T = \frac{9550P}{n}$

3. For Solid Cylinder Inertia (kg m²) $I = \frac{md^2}{800} \times 10^{-4} = \frac{\pi\, lqd^4}{32000} \times 10^{-6}$

4. For Hollow Cylinder Inertia (kg m²) $I = \frac{m(da^2 - di^2)}{800} \times 10^{-4} = \frac{\pi\, lq\,(da^4 - di^4)}{32000} \times 10^{-6}$

5. Flywheel Inertia GD² (kp m²) ≙ 4 × I

6. Acceleration Torque (Nm) $Ta = \frac{0.105\, It\,(n_2 - n_1)}{ta}$

7. Total drive Torque (Nm) $Tt = Ta + T_L$

   also $Tt = \frac{KTs + T_L}{1 + K}$ where $K = \frac{I_L + It}{Id}$

8. Tooth & Belt/Chain drive speed m/Sec $V = \frac{Z \times p \times n}{60{,}000}$

9. Pull in Belt/chain (N) $FL = \frac{P \times 1000}{V}$

10. Centrifugal Pull Belt/Chain $Fc = WV^2$

Where

d	=	diameter - mm	p	=	chain/belt pitch - mm
da	=	outside diameter - mm	P	=	Power - kw
di	=	inside diameter - mm	q	=	density - kg/cm³
Fc	=	Centrifugal - Newtons	ta	=	time acceleration - secs
F_L	=	Load (Power) Pull - Newtons	T	=	Torque - Nm
I	=	Inertia - kgm²	Ta	=	Acceleration Torque - Nm
Id	=	Inertia of Driver - kgm²	T_L	=	Load Torque - Nm
I_L	=	Inertia of Load - kgm²	Ts	=	Motor Starting Torque - Nm
It	=	Total Inertia - kgm²	Tt	=	Total Torque - Nm
l	=	length - mm	V	=	Velocity - m/Sec
m	=	mass - kg	W	=	Weight - kg/m
n	=	rotational speed - r.p.m.	Z	=	No. Teeth in Pulley
$n_2 - n_1$	=	change in speed - r.p.m.			

Conversion Factors

LENGTH	mm	×	0.03937	=	INCHES	×	25.4	=	mm
	METRES	×	3.2808	=	FEET	×	0.3048	=	METRES
WEIGHT	kg	×	2.2046	=	POUND f	×	0.4536	=	kg
FORCE	N (Newton)	×	0.2248	=	POUND f	×	4.4482	=	N
	N (Newton)	×	0.1019	=	kg f	×	9.807	=	N
TORQUE	Nm	×	0.7376	=	lb f ft	×	1.356	=	Nm
	kgfm	×	9.8066	=	Nm	×	0.1019	=	kgfm
POWER	kW	×	1.341	=	HP	×	0.7457	=	kW
	kW	×	1.3596	=	PS	×	0.7355	=	kW
INERTIA	kgm²	×	23.7304	=	lb f ft²	×	0.04214	=	kgcm²
	kgcm²	×	10^{-4}	=	kg m²	×	10,000	=	kgcm²
	kgcm²	×	0.3417	=	lb in²	×	2.9264	=	kgcm²
	GD²kpm	×	0.25	=	kg m²	×	4.0	=	kpm